Evolution®

Column Based Workstation

KEWAUNEE®

encouraging new discovery... *Worldwide*

EVOLUTION

Column Based Workstations

- Infinitely height adjustable worksurfaces and shelving
- Starter and add-on assemblies; single and double-sided
- Laminates, edge-grain maple, phenolic resin and Kemresin worksurfaces available
- UL listed, column mount power bars with power switch and built-in circuit breaker
- Power, data, and service fixtures mountable in columns with pre-wired and pre-piped options
- Storage options include mobile, suspended, freestanding, and overhead
- Meets SEFA 10, Adaptable Casework Systems, Class 7 (freestanding) and Class 8 (mobile) standards

Contents

Evolution Workstations 2
9" Column Modules 6
12" Column Modules 10
Work Tops 14
Corner Module 16
Worksurface Frames 18
Columns 20
9" Column Shelving 22
12" Column Shelving 27
Shelf Brackets 32
Mobile Floor Shelving 34
Lighting 35
Power Bar 37
Tack Panels 38
Bin Bar 39
Horizontal Chase 40
Service Fittings 41
Mobile Base Cabinets 50
Suspended Base Cabinets 56
Upper Storage Cabinets 62
Ceiling Service Panels 74
Technical Information 78
Index 86

Kewaunee's Evolution is a free standing workstation system that is designed to meet the changing needs of today's Laboratory and Technical environments. The column based design offers infinite height adjustment of the worksurface and shelving; as well as other column mounted accessories. Its modular design and ability to share columns helps control cost and simplifies lab layout. Three standard column heights create platforms with and without an above counter support structure. Evolution is available pre-piped and pre-wired and easily incorporates with overhead utility grids or service carriers and panels. Evolution is designed for mobile, suspended, free-standing, and overhead storage.

Evolution Workstation Part Numbers

Workstation Part Number Explanation

FV 11 M 84 24 36 - 00

System Type
FV = Evolution

Column Type
10 = Single-sided Starter 9" Column
11 = Single-sided Add-on 9" Column
20 = Double-sided Starter 9" Column
21 = Double-sided Add-on 9" Column
30 = Single-sided Starter 12" Column
31 = Single-sided Add-on 12" Column
40 = Double-sided Starter 12" Column
41 = Double-sided Add-on 12" Column

Material
M = Metal (powder coated steel & aluminum)
P = Plastic Laminate
E = ESD Plastic Laminate
R = Kemresin
T = Phenolic Resin
Work Top Materials

Column Height
Standard Heights: 36" – 54" – 84"

Work Top Depth
Standard Depths: 24" – 30" – 36"
Double-sided workstations use two work tops back-to-back
Double-sided Overall depth = Standard Depth x 2

Work Top Length
Standard Lengths: 24" - 30" - 36" - 42" - 48"
54" - 60" - 66" - 72" - 78" - 84" - 90" - 96"

Separator

Options (see below)

Workstation Options

FV 11 M 84 24 36 - 00

Accent Strip Options
0 = Plastic Laminate Accent Strip
1 = Powder Coated Steel Accent Strip

Column Foot Options
0 = 1½" Diameter Leveling Glide
1 = 4" Swivel, Locking Caster
2 = 4" Heavy Duty Leveling Caster

Load Ratings — Asembly Load Maximums

Single-sided – 9" Column Workstation

Workstation on Glides or Heavy Duty Leveling Casters: 1,200lbs
Worksurface Frame: 750lbs
(includes worksurface and suspended storage)
Workstation on Swivel Casters: 800lbs
Shelving: (each) 250lbs

Double-sided – 9" Column Workstation

Workstation on Glides or Heavy Duty Leveling Casters: 2,000lbs
Worksurface Frame:(each side).....500lbs
(includes worksurface and suspended storage)
Workstation on Swivel Casters: ...1200lbs
Shelving: (each) 250lbs

Single-sided – 12" Column Workstation

Workstation on Glides or Heavy Duty Leveling Casters: 1,750lbs
Worksurface Frame: 1000lbs
(includes worksurface and suspended storage)
Workstation on Swivel Casters: 800lbs
Shelving: (each) 250lbs

Double-sided – 12" Column Workstation

Workstation on Glides or Heavy Duty Leveling Casters: 2,500lbs
Worksurface Frame:(each side).....600lbs
(includes worksurface and suspended storage)
Workstation on Swivel Casters: ...1200lbs
Shelving: (each) 250lbs

Illustrations and specifications are based on most current design and production information available. Kewaunee reserves the right to make changes at any time without notice.

KEWAUNEE Scientific Corporation

Typical Evolution Workstation

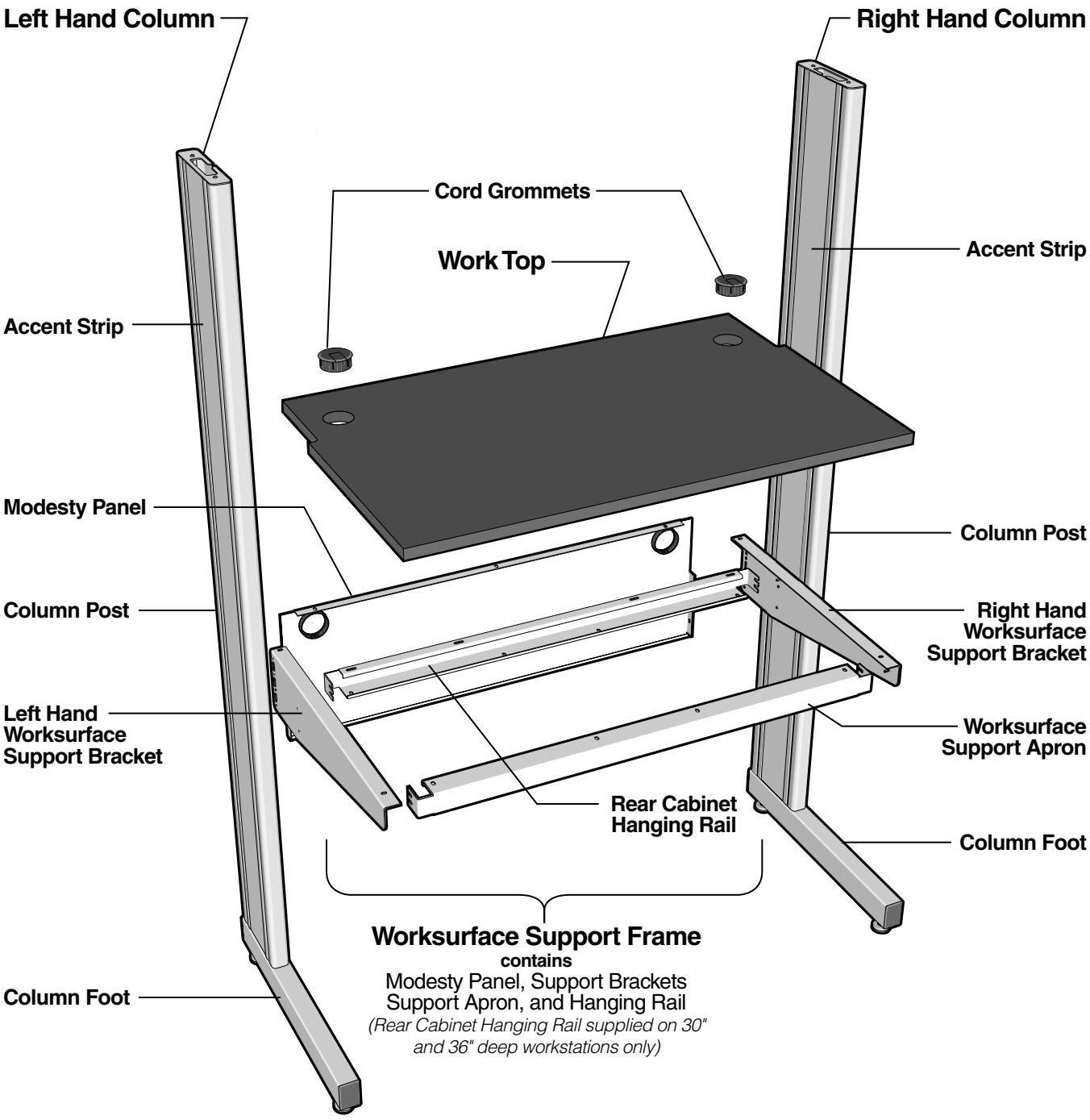

Illustrations and specifications are based on most current design and production information available. Kewaunee reserves the right to make changes at any time without notice.

Evolution Work Top Material Options

Plastic Laminate

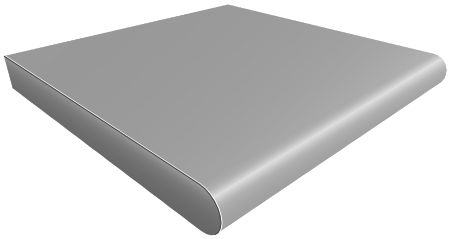

Edge Treatment:
Full-round front edge, self-edged ends and back.

Appearance: Hard smooth surface.

Available Colors: Almond, Dove Grey, Light Neutral, Black
Other colors available on request.

Composition: Horizontal Grade (HGP) high pressure laminate attached to 1" thick solid, M-2, particle board with water resistant advesive.

Physical Properties: Good impact and heat resistance; fair chemical resistance.

Applications: Recommended for general purpose uses.

Electrostatic Dissipative (ESD) Laminate

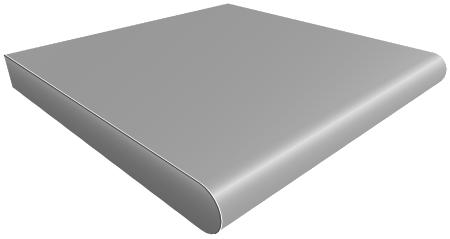

Edge Treatment:
Full-round front edge, self-edged ends and back.

Appearance: Hard textured surface.

Available Colors: Almond, Dove Grey, Black
Other colors available on request.

Composition: ESD Horizontal Grade (HGP) high pressure laminate attached to 1" thick solid, M-2, particle board with water resistant advesive.

Physical Properties: Good impact and heat resistance; fair chemical resistance.

Applications: Ideally suited for a variety of electronically sensitive applications.

Kemresin®

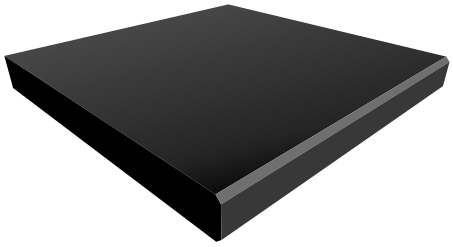

Edge Treatment:
Chamfered front edge, finished square ends and back.

Appearance: Ultra-smooth non-porous surface.

Available Colors: Black, Grey, Putty, Slate

Composition: 1" thick molded epoxy resin.

Physical Properties: Excellent resistance to practically all acids, alkalies and solvents. Highly resistant to heat and normal physical abuse.

Applications: Use wherever optimum physical and chemical resisting properties are required.

Phenolic Resin

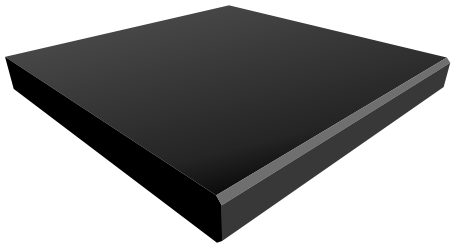

Edge Treatment:
Chamfered front edge, finished square ends and back.

Appearance: Hard, smooth, non-glare surface

Available Colors: Black
Other colors available on request.

Composition: Cellulose fiber reinforced phenolic resin core with a polyurethane copolymer surface.

Physical Properties: Good chemical resistance to wide range of acids, alkalies and solvents.

Applications: Use wherever a high degree of chemical resistance is required.

Illustrations and specifications are based on most current design and production information available. Kewaunee reserves the right to make changes at any time without notice.

KEWAUNEE Scientific Corporation

Evolution Column Options

Column Accent Strip Options

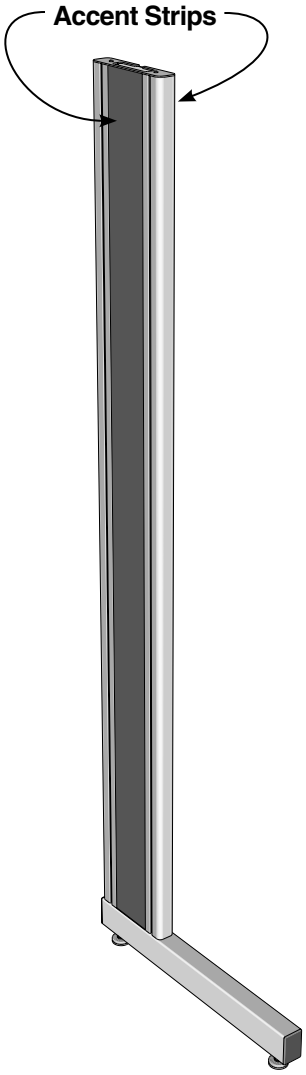

Workstation Support Columns are furnished with two accent strips, one on each side of the column. Accent strips may be either Plastic Laminate or Powder Coated Steel in colors to either match or accent the Workstation color.

Plastic Laminate Accent Strip

May be used on any 9" or 12" column.

Available Colors:

Almond	Dove Gray
Black	Light Neutral
Brittany Blue	Midori

Other colors available on request.

Powder Coated Steel Accent Strip

Required for columns with fittings or fixtures.

Available Colors: *All Standard Kewaunee Steel Finish Colors*

Amazon	Mountain Blue
Black	Sage
Chocolate	Sand Tan
Driftwood	Satin Grey
Force Grey	Snow White
Light Neutral	Stormy Blue
Malt	True Blue
Midori	Wineberry

Column Foot Options

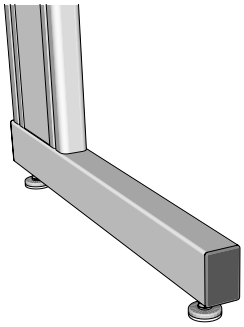

1½" Diameter Glide

Overall Height: 1"
Load Rating: 500lbs each

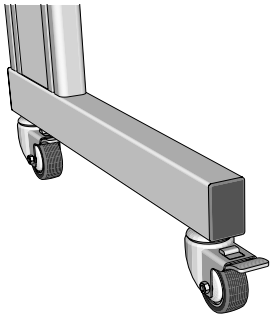

Swivel Locking Caster

Overall Height: 4"
Load Rating: 200lbs each

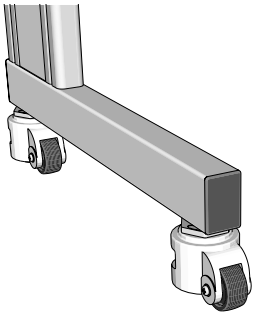

Heavy Duty Leveling Caster

Overall Height: 4"
Load Rating: 500lbs each

Illustrations and specifications are based on most current design and production information available. Kewaunee reserves the right to make changes at any time without notice.

Single-sided – 9" Column Modules

Single-sided 9" Column Modules are available in three heights; 36", 54", and 84", three depths; 24", 30" and 36", and in lengths as shown — in both starter assemblies and add-on assemblies. Starter assemblies consist of two columns, a worksurface support frame, and all required hardware. Add-on assemblies consist of one column, a worksurface support frame, and all required hardware. Workstation modules ship knocked-down for assembly in the field.

Work Tops must be specified separately. (see page 14)

36" High – 24" Deep

Starter		Add-on	
FV10M362424-__	24"L	FV11M362424-__	24"L
FV10M362430-__	30"L	FV11M362430-__	30"L
FV10M362436-__	36"L	FV11M362436-__	36"L
FV10M362442-__	42"L	FV11M362442-__	42"L
FV10M362448-__	48"L	FV11M362448-__	48"L
FV10M362454-__	54"L	FV11M362454-__	54"L
FV10M362460-__	60"L	FV11M362460-__	60"L
FV10M362466-__	66"L	FV11M362466-__	66"L
FV10M362472-__	72"L	FV11M362472-__	72"L
FV10M362478-__	78"L	FV11M362478-__	78"L
FV10M362484-__	84"L	FV11M362484-__	84"L
FV10M362490-__	90"L	FV11M362490-__	90"L
FV10M362496-__	96"L	FV11M362496-__	96"L

36" High – 30" Deep

Starter		Add-on	
FV10M363024-__	24"L	FV11M363024-__	24"L
FV10M363030-__	30"L	FV11M363030-__	30"L
FV10M363036-__	36"L	FV11M363036-__	36"L
FV10M363042-__	42"L	FV11M363042-__	42"L
FV10M363048-__	48"L	FV11M363048-__	48"L
FV10M363054-__	54"L	FV11M363054-__	54"L
FV10M363060-__	60"L	FV11M363060-__	60"L
FV10M363066-__	66"L	FV11M363066-__	66"L
FV10M363072-__	72"L	FV11M363072-__	72"L
FV10M363078-__	78"L	FV11M363078-__	78"L
FV10M363084-__	84"L	FV11M363084-__	84"L
FV10M363090-__	90"L	FV11M363090-__	90"L
FV10M363096-__	96"L	FV11M363096-__	96"L

54" High – 24 " Deep

Starter		Add-on	
FV10M542424-__	24"L	FV11M542424-__	24"L
FV10M542430-__	30"L	FV11M542430-__	30"L
FV10M542436-__	36"L	FV11M542436-__	36"L
FV10M542442-__	42"L	FV11M542442-__	42"L
FV10M542448-__	48"L	FV11M542448-__	48"L
FV10M542454-__	54"L	FV11M542454-__	54"L
FV10M542460-__	60"L	FV11M542460-__	60"L
FV10M542466-__	66"L	FV11M542466-__	66"L
FV10M542472-__	72"L	FV11M542472-__	72"L
FV10M542478-__	78"L	FV11M542478-__	78"L
FV10M542484-__	84"L	FV11M542484-__	84"L
FV10M542490-__	90"L	FV11M542490-__	90"L
FV10M542496-__	96"L	FV11M542496-__	96"L

54" High – 30" Deep

Starter		Add-on	
FV10M543024-__	24"L	FV11M543024-__	24"L
FV10M543030-__	30"L	FV11M543030-__	30"L
FV10M543036-__	36"L	FV11M543036-__	36"L
FV10M543042-__	42"L	FV11M543042-__	42"L
FV10M543048-__	48"L	FV11M543048-__	48"L
FV10M543054-__	54"L	FV11M543054-__	54"L
FV10M543060-__	60"L	FV11M543060-__	60"L
FV10M543066-__	66"L	FV11M543066-__	66"L
FV10M543072-__	72"L	FV11M543072-__	72"L
FV10M543078-__	78"L	FV11M543078-__	78"L
FV10M543084-__	84"L	FV11M543084-__	84"L
FV10M543090-__	90"L	FV11M543090-__	90"L
FV10M543096-__	96"L	FV11M543096-__	96"L

84" High – 24" Deep

Starter		Add-on	
FV10M842424-__	24"L	FV11M842424-__	24"L
FV10M842430-__	30"L	FV11M842430-__	30"L
FV10M842436-__	36"L	FV11M842436-__	36"L
FV10M842442-__	42"L	FV11M842442-__	42"L
FV10M842448-__	48"L	FV11M842448-__	48"L
FV10M842454-__	54"L	FV11M842454-__	54"L
FV10M842460-__	60"L	FV11M842460-__	60"L
FV10M842466-__	66"L	FV11M842466-__	66"L
FV10M842472-__	72"L	FV11M842472-__	72"L
FV10M842478-__	78"L	FV11M842478-__	78"L
FV10M842484-__	84"L	FV11M842484-__	84"L
FV10M842490-__	90"L	FV11M842490-__	90"L
FV10M842496-__	96"L	FV11M842496-__	96"L

84" High – 30" Deep

Starter		Add-on	
FV10M843024-__	24"L	FV11M843024-__	24"L
FV10M843030-__	30"L	FV11M843030-__	30"L
FV10M843036-__	36"L	FV11M843036-__	36"L
FV10M843042-__	42"L	FV11M843042-__	42"L
FV10M843048-__	48"L	FV11M843048-__	48"L
FV10M843054-__	54"L	FV11M843054-__	54"L
FV10M843060-__	60"L	FV11M843060-__	60"L
FV10M843066-__	66"L	FV11M843066-__	66"L
FV10M843072-__	72"L	FV11M843072-__	72"L
FV10M843078-__	78"L	FV11M843078-__	78"L
FV10M843084-__	84"L	FV11M843084-__	84"L
FV10M843090-__	90"L	FV11M843090-__	90"L
FV10M843096-__	96"L	FV11M843096-__	96"L

Illustrations and specifications are based on most current design and production information available. Kewaunee reserves the right to make changes at any time without notice.

Single-sided – 9" Column Modules

Module Options:
The two final digits in the part numbers specifies the Accent Panel Material option and the Foot option for the workstation.

Accent Strip Material Options:
0 = Plastic Laminate Panel
1 = Powder Coated Steel Panel

Column Foot Options:
0 = 1½" Leveling Glide
1 = 4" Caster
2 = 4" Heavy Duty Leveling Caster

Example: FV10M362424-**00** = with Laminate Accent Strip and Glides

36" High – 36" Deep

36"High

Starter		Add-on	
FV10M363624-__	24"L	**FV11M363624-__**	24”L
FV10M363630-__	30"L	**FV11M363630-__**	30”L
FV10M363636-__	36"L	**FV11M363636-__**	36”L
FV10M363642-__	42"L	**FV11M363642-__**	42”L
FV10M363648-__	48"L	**FV11M363648-__**	48”L
FV10M363654-__	54"L	**FV11M363654-__**	54”L
FV10M363660-__	60"L	**FV11M363660-__**	60”L
FV10M363666-__	66"L	**FV11M363666-__**	66”L
FV10M363672-__	72"L	**FV11M363672-__**	72”L
FV10M363678-__	78"L	**FV11M363678-__**	78”L
FV10M363684-__	84"L	**FV11M363684-__**	84”L
FV10M363690-__	90"L	**FV11M363690-__**	90”L
FV10M363696-__	96"L	**FV11M363696-__**	96”L

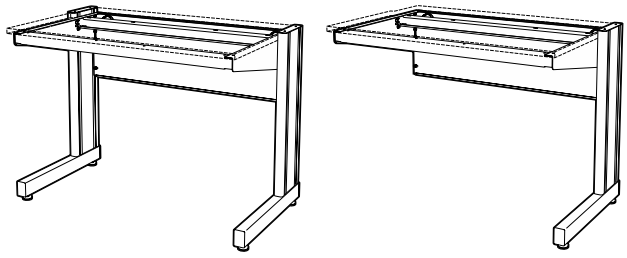

54" High – 36 " Deep

54" High

Starter		Add-on	
FV10M543624-__	24"L	**FV11M543624-__**	24"L
FV10M543630-__	30"L	**FV11M543630-__**	30"L
FV10M543636-__	36"L	**FV11M543636-__**	36"L
FV10M543642-__	42"L	**FV11M543642-__**	42"L
FV10M543648-__	48"L	**FV11M543648-__**	48"L
FV10M543654-__	54"L	**FV11M543654-__**	54"L
FV10M543660-__	60"L	**FV11M543660-__**	60"L
FV10M543666-__	66"L	**FV11M543666-__**	66"L
FV10M543672-__	72"L	**FV11M543672-__**	72"L
FV10M543678-__	78"L	**FV11M543678-__**	78"L
FV10M543684-__	84"L	**FV11M543684-__**	84"L
FV10M543690-__	90"L	**FV11M543690-__**	90"L
FV10M543696-__	96"L	**FV11M543696-__**	96"L

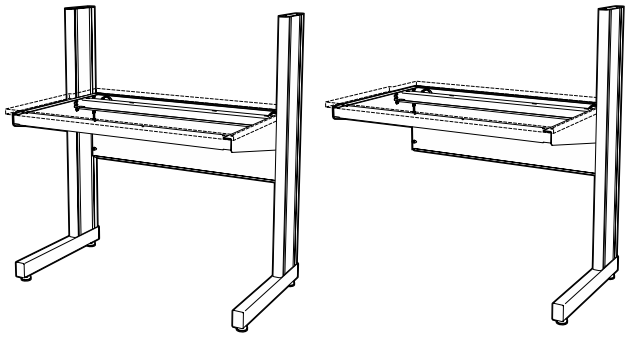

84" High – 36" Deep

84" High

Starter		Add-on	
FV10M843624-__	24"L	**FV11M843624-__**	24"L
FV10M843630-__	30"L	**FV11M843630-__**	30"L
FV10M843636-__	36"L	**FV11M843636-__**	36"L
FV10M843642-__	42"L	**FV11M843642-__**	42"L
FV10M843648-__	48"L	**FV11M843648-__**	48"L
FV10M843654-__	54"L	**FV11M843654-__**	54"L
FV10M843660-__	60"L	**FV11M843660-__**	60"L
FV10M843666-__	66"L	**FV11M843666-__**	66"L
FV10M843672-__	72"L	**FV11M843672-__**	72"L
FV10M843678-__	78"L	**FV11M843678-__**	78"L
FV10M843684-__	84"L	**FV11M843684-__**	84"L
FV10M843690-__	90"L	**FV11M843690-__**	90"L
FV10M843696-__	96"L	**FV11M843696-__**	96"L

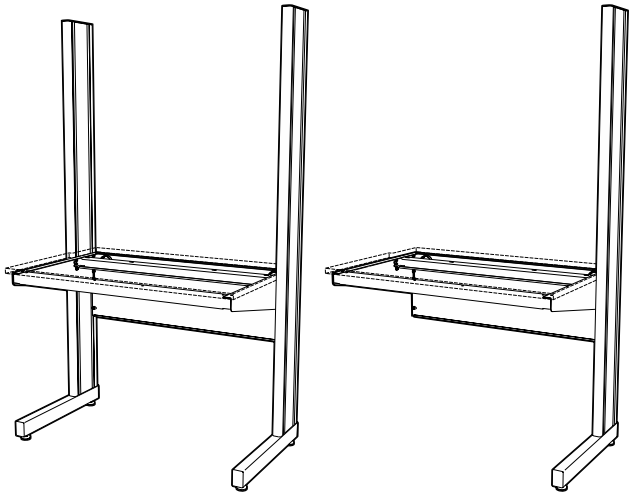

Illustrations and specifications are based on most current design and production information available. Kewaunee reserves the right to make changes at any time without notice.

Double-sided – 9" Column Modules

Double-sided 9" Column Modules are available in three heights; 36", 54", and 84", three depths; 48", 60" and 72", and in lengths as shown — in both starter assemblies and add-on assemblies. Starter assemblies consist of two columns, two worksurface support frames, and all required hardware. Add-on assemblies consist of one column, two worksurface support frames, and all required hardware. Workstation modules ship knocked-down for assembly in the field.

Work Tops must be specified separately. (see page 14)

36" High – 48" Deep

Starter		Add-on	
FV20M364824-__	24"L	FV21M364824-__	24"L
FV20M364830-__	30"L	FV21M364830-__	30"L
FV20M364836-__	36"L	FV21M364836-__	36"L
FV20M364842-__	42"L	FV21M364842-__	42"L
FV20M364848-__	48"L	FV21M364848-__	48"L
FV20M364854-__	54"L	FV21M364854-__	54"L
FV20M364860-__	60"L	FV21M364860-__	60"L
FV20M364866-__	66"L	FV21M364866-__	66"L
FV20M364872-__	72"L	FV21M364872-__	72"L
FV20M364878-__	78"L	FV21M364878-__	78"L
FV20M364884-__	84"L	FV21M364884-__	84"L
FV20M364890-__	90"L	FV21M364890-__	90"L
FV20M364896-__	96"L	FV21M364896-__	96"L

36" High – 60" Deep

Starter		Add-on	
FV20M366024-__	24"L	FV21M366024-__	24"L
FV20M366030-__	30"L	FV21M366030-__	30"L
FV20M366036-__	36"L	FV21M366036-__	36"L
FV20M366042-__	42"L	FV21M366042-__	42"L
FV20M366048-__	48"L	FV21M366048-__	48"L
FV20M366054-__	54"L	FV21M366054-__	54"L
FV20M366060-__	60"L	FV21M366060-__	60"L
FV20M366066-__	66"L	FV21M366066-__	66"L
FV20M366072-__	72"L	FV21M366072-__	72"L
FV20M366078-__	78"L	FV21M366078-__	78"L
FV20M366084-__	84"L	FV21M366084-__	84"L
FV20M366090-__	90"L	FV21M366090-__	90"L
FV20M366096-__	96"L	FV21M366096-__	96"L

54" High – 48" Deep

Starter		Add-on	
FV20M544824-__	24"L	FV21M544824-__	24"L
FV20M544830-__	30"L	FV21M544830-__	30"L
FV20M544836-__	36"L	FV21M544836-__	36"L
FV20M544842-__	42"L	FV21M544842-__	42"L
FV20M544848-__	48"L	FV21M544848-__	48"L
FV20M544854-__	54"L	FV21M544854-__	54"L
FV20M544860-__	60"L	FV21M544860-__	60"L
FV20M544866-__	66"L	FV21M544866-__	66"L
FV20M544872-__	72"L	FV21M544872-__	72"L
FV20M544878-__	78"L	FV21M544878-__	78"L
FV20M544884-__	84"L	FV21M544884-__	84"L
FV20M544890-__	90"L	FV21M544890-__	90"L
FV20M544896-__	96"L	FV21M544896-__	96"L

54" High – 60" Deep

Starter		Add-on	
FV20M546024-__	24"L	FV21M546024-__	24"L
FV20M546030-__	30"L	FV21M546030-__	30"L
FV20M546036-__	36"L	FV21M546036-__	36"L
FV20M546042-__	42"L	FV21M546042-__	42"L
FV20M546048-__	48"L	FV21M546048-__	48"L
FV20M546054-__	54"L	FV21M546054-__	54"L
FV20M546060-__	60"L	FV21M546060-__	60"L
FV20M546066-__	66"L	FV21M546066-__	66"L
FV20M546072-__	72"L	FV21M546072-__	72"L
FV20M546078-__	78"L	FV21M546078-__	78"L
FV20M546084-__	84"L	FV21M546084-__	84"L
FV20M546090-__	90"L	FV21M546090-__	90"L
FV20M546096-__	96"L	FV21M546096-__	96"L

84" High – 48" Deep

Starter		Add-on	
FV20M844824-__	24"L	FV21M844824-__	24"L
FV20M844830-__	30"L	FV21M844830-__	30"L
FV20M844836-__	36"L	FV21M844836-__	36"L
FV20M844842-__	42"L	FV21M844842-__	42"L
FV20M844848-__	48"L	FV21M844848-__	48"L
FV20M844854-__	54"L	FV21M844854-__	54"L
FV20M844860-__	60"L	FV21M844860-__	60"L
FV20M844866-__	66"L	FV21M844866-__	66"L
FV20M844872-__	72"L	FV21M844872-__	72"L
FV20M844878-__	78"L	FV21M844878-__	78"L
FV20M844884-__	84"L	FV21M844884-__	84"L
FV20M844890-__	90"L	FV21M844890-__	90"L
FV20M844896-__	96"L	FV21M844896-__	96"L

84" High – 60" Deep

Starter		Add-on	
FV20M846024-__	24"L	FV21M846024-__	24"L
FV20M846030-__	30"L	FV21M846030-__	30"L
FV20M846036-__	36"L	FV21M846036-__	36"L
FV20M846042-__	42"L	FV21M846042-__	42"L
FV20M846048-__	48"L	FV21M846048-__	48"L
FV20M846054-__	54"L	FV21M846054-__	54"L
FV20M846060-__	60"L	FV21M846060-__	60"L
FV20M846066-__	66"L	FV21M846066-__	66"L
FV20M846072-__	72"L	FV21M846072-__	72"L
FV20M846078-__	78"L	FV21M846078-__	78"L
FV20M846084-__	84"L	FV21M846084-__	84"L
FV20M846090-__	90"L	FV21M846090-__	90"L
FV20M846096-__	96"L	FV21M846096-__	96"L

Illustrations and specifications are based on most current design and production information available. Kewaunee reserves the right to make changes at any time without notice.

Double-sided – 9" Column Modules

Module Options:
The two final digits in the part numbers specifies the Accent Panel Material option and the Foot option for the workstation.

Accent Strip Material Options:
0 = Plastic Laminate Panel
1 = Powder Coated Steel Panel

Example: FV20M364824-**12** = with Steel Accent Strip and HD Caster

Column Foot Options:
0 = 1½" Leveling Glide
1 = 4" Caster
2 = 4" Heavy Duty Leveling Caster

36" High – 72" Deep

36"High

Starter		Add-on	
FV20M367224-__	24"L	**FV21M367224-__**	24"L
FV20M367230-__	30"L	**FV21M367230-__**	30"L
FV20M367236-__	36"L	**FV21M367236-__**	36"L
FV20M367242-__	42"L	**FV21M367242-__**	42"L
FV20M367248-__	48"L	**FV21M367248-__**	48"L
FV20M367254-__	54"L	**FV21M367254-__**	54"L
FV20M367260-__	60"L	**FV21M367260-__**	60"L
FV20M367266-__	66"L	**FV21M367266-__**	66"L
FV20M367272-__	72"L	**FV21M367272-__**	72"L
FV20M367278-__	78"L	**FV21M367278-__**	78"L
FV20M367284-__	84"L	**FV21M367284-__**	84"L
FV20M367290-__	90"L	**FV21M367290-__**	90"L
FV20M367296-__	96"L	**FV21M367296-__**	96"L

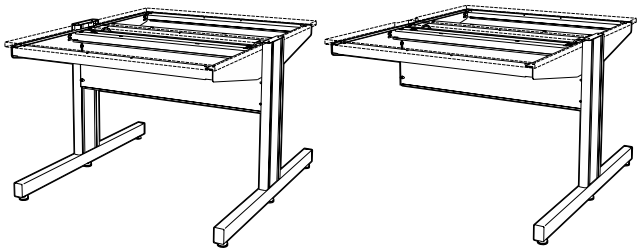

54" High – 72 " Deep

54" High

Starter		Add-on	
FV20M547224-__	24"L	**FV21M547224-__**	24"L
FV20M547230-__	30"L	**FV21M547230-__**	30"L
FV20M547236-__	36"L	**FV21M547236-__**	36"L
FV20M547242-__	42"L	**FV21M547242-__**	42"L
FV20M547248-__	48"L	**FV21M547248-__**	48"L
FV20M547254-__	54"L	**FV21M547254-__**	54"L
FV20M547260-__	60"L	**FV21M547260-__**	60"L
FV20M547266-__	66"L	**FV21M547266-__**	66"L
FV20M547272-__	72"L	**FV21M547272-__**	72"L
FV20M547278-__	78"L	**FV21M547278-__**	78"L
FV20M547284-__	84"L	**FV21M547284-__**	84"L
FV20M547290-__	90"L	**FV21M547290-__**	90"L
FV20M547296-__	96"L	**FV21M547296-__**	96"L

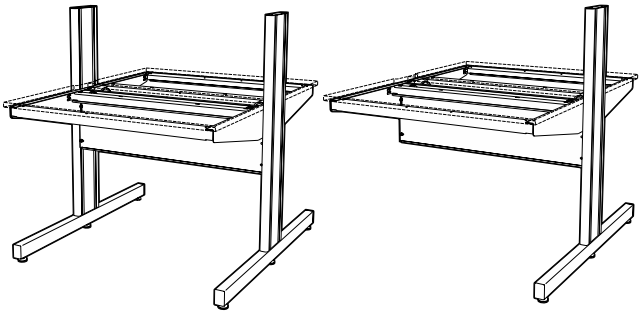

84" High – 72" Deep

84" High

Starter		Add-on	
FV20M847224-__	24"L	**FV21M847224-__**	24"L
FV20M847230-__	30"L	**FV21M847230-__**	30"L
FV20M847236-__	36"L	**FV21M847236-__**	36"L
FV20M847242-__	42"L	**FV21M847242-__**	42"L
FV20M847248-__	48"L	**FV21M847248-__**	48"L
FV20M847254-__	54"L	**FV21M847254-__**	54"L
FV20M847260-__	60"L	**FV21M847260-__**	60"L
FV20M847266-__	66"L	**FV21M847266-__**	66"L
FV20M847272-__	72"L	**FV21M847272-__**	72"L
FV20M847278-__	78"L	**FV21M847278-__**	78"L
FV20M847284-__	84"L	**FV21M847284-__**	84"L
FV20M847290-__	90"L	**FV21M847290-__**	90"L
FV20M847296-__	96"L	**FV21M847296-__**	96"L

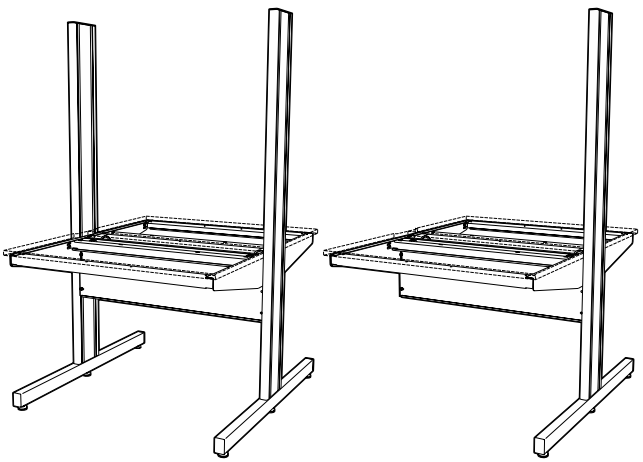

Illustrations and specifications are based on most current design and production information available. Kewaunee reserves the right to make changes at any time without notice.

Single-sided – 12" Column Modules

Single-sided 12" Column Modules are available in three heights; 36", 54", and 84", three depths; 24", 30" and 36", and in lengths as shown — in both starter assemblies and add-on assemblies. Starter assemblies consist of two columns, a worksurface support frame, and all required hardware. Add-on assemblies consist of one column, a worksurface support frame, and all required hardware. Workstation modules ship knocked-down for assembly in the field.

Work Tops must be specified separately. (see page 15)

36" High – 24" Deep

Starter		Add-on	
FV30M362424-__	24"L	FV31M362424-__	24"L
FV30M362430-__	30"L	FV31M362430-__	30"L
FV30M362436-__	36"L	FV31M362436-__	36"L
FV30M362442-__	42"L	FV31M362442-__	42"L
FV30M362448-__	48"L	FV31M362448-__	48"L
FV30M362454-__	54"L	FV31M362454-__	54"L
FV30M362460-__	60"L	FV31M362460-__	60"L
FV30M362466-__	66"L	FV31M362466-__	66"L
FV30M362472-__	72"L	FV31M362472-__	72"L
FV30M362478-__	78"L	FV31M362478-__	78"L
FV30M362484-__	84"L	FV31M362484-__	84"L
FV30M362490-__	90"L	FV31M362490-__	90"L
FV30M362496-__	96"L	FV31M362496-__	96"L

36" High – 30" Deep

Starter		Add-on	
FV30M363024-__	24"L	FV31M363024-__	24"L
FV30M363030-__	30"L	FV31M363030-__	30"L
FV30M363036-__	36"L	FV31M363036-__	36"L
FV30M363042-__	42"L	FV31M363042-__	42"L
FV30M363048-__	48"L	FV31M363048-__	48"L
FV30M363054-__	54"L	FV31M363054-__	54"L
FV30M363060-__	60"L	FV31M363060-__	60"L
FV30M363066-__	66"L	FV31M363066-__	66"L
FV30M363072-__	72"L	FV31M363072-__	72"L
FV30M363078-__	78"L	FV31M363078-__	78"L
FV30M363084-__	84"L	FV31M363084-__	84"L
FV30M363090-__	90"L	FV31M363090-__	90"L
FV30M363096-__	96"L	FV31M363096-__	96"L

54" High – 24 " Deep

Starter		Add-on	
FV30M542424-__	24"L	FV31M542424-__	24"L
FV30M542430-__	30"L	FV31M542430-__	30"L
FV30M542436-__	36"L	FV31M542436-__	36"L
FV30M542442-__	42"L	FV31M542442-__	42"L
FV30M542448-__	48"L	FV31M542448-__	48"L
FV30M542454-__	54"L	FV31M542454-__	54"L
FV30M542460-__	60"L	FV31M542460-__	60"L
FV30M542466-__	66"L	FV31M542466-__	66"L
FV30M542472-__	72"L	FV31M542472-__	72"L
FV30M542478-__	78"L	FV31M542478-__	78"L
FV30M542484-__	84"L	FV31M542484-__	84"L
FV30M542490-__	90"L	FV31M542490-__	90"L
FV30M542496-__	96"L	FV31M542496-__	96"L

54" High – 30" Deep

Starter		Add-on	
FV30M543024-__	24"L	FV31M543024-__	24"L
FV30M543030-__	30"L	FV31M543030-__	30"L
FV30M543036-__	36"L	FV31M543036-__	36"L
FV30M543042-__	42"L	FV31M543042-__	42"L
FV30M543048-__	48"L	FV31M543048-__	48"L
FV30M543054-__	54"L	FV31M543054-__	54"L
FV30M543060-__	60"L	FV31M543060-__	60"L
FV30M543066-__	66"L	FV31M543066-__	66"L
FV30M543072-__	72"L	FV31M543072-__	72"L
FV30M543078-__	78"L	FV31M543078-__	78"L
FV30M543084-__	84"L	FV31M543084-__	84"L
FV30M543090-__	90"L	FV31M543090-__	90"L
FV30M543096-__	96"L	FV31M543096-__	96"L

84" High – 24" Deep

Starter		Add-on	
FV30M842424-__	24"L	FV31M842424-__	24"L
FV30M842430-__	30"L	FV31M842430-__	30"L
FV30M842436-__	36"L	FV31M842436-__	36"L
FV30M842442-__	42"L	FV31M842442-__	42"L
FV30M842448-__	48"L	FV31M842448-__	48"L
FV30M842454-__	54"L	FV31M842454-__	54"L
FV30M842460-__	60"L	FV31M842460-__	60"L
FV30M842466-__	66"L	FV31M842466-__	66"L
FV30M842472-__	72"L	FV31M842472-__	72"L
FV30M842478-__	78"L	FV31M842478-__	78"L
FV30M842484-__	84"L	FV31M842484-__	84"L
FV30M842490-__	90"L	FV31M842490-__	90"L
FV30M842496-__	96"L	FV31M842496-__	96"L

84" High – 30" Deep

Starter		Add-on	
FV30M843024-__	24"L	FV31M843024-__	24"L
FV30M843030-__	30"L	FV31M843030-__	30"L
FV30M843036-__	36"L	FV31M843036-__	36"L
FV30M843042-__	42"L	FV31M843042-__	42"L
FV30M843048-__	48"L	FV31M843048-__	48"L
FV30M843054-__	54"L	FV31M843054-__	54"L
FV30M843060-__	60"L	FV31M843060-__	60"L
FV30M843066-__	66"L	FV31M843066-__	66"L
FV30M843072-__	72"L	FV31M843072-__	72"L
FV30M843078-__	78"L	FV31M843078-__	78"L
FV30M843084-__	84"L	FV31M843084-__	84"L
FV30M843090-__	90"L	FV31M843090-__	90"L
FV30M843096-__	96"L	FV31M843096-__	96"L

Illustrations and specifications are based on most current design and production information available. Kewaunee reserves the right to make changes at any time without notice.

Single-sided – 12" Column Modules

Module Options:
The two final digits in the part numbers specifies the Accent Panel Material option and the Foot option for the workstation.

Accent Strip Material Options:
0 = Plastic Laminate Panel
1 = Powder Coated Steel Panel

Example: FV30M362424-**00** = with Laminate Accent Strip and Glides

Column Foot Options:
0 = 1½" Leveling Glide
1 = 4" Caster
2 = 4" Heavy Duty Leveling Caster

36" High – 36" Deep

36"High

Starter		Add-on	
FV30M363624-__	24"L	**FV31M363624-__**	24"L
FV30M363630-__	30"L	**FV31M363630-__**	30"L
FV30M363636-__	36"L	**FV31M363636-__**	36"L
FV30M363642-__	42"L	**FV31M363642-__**	42"L
FV30M363648-__	48"L	**FV31M363648-__**	48"L
FV30M363654-__	54"L	**FV31M363654-__**	54"L
FV30M363660-__	60"L	**FV31M363660-__**	60"L
FV30M363666-__	66"L	**FV31M363666-__**	66"L
FV30M363672-__	72"L	**FV31M363672-__**	72"L
FV30M363678-__	78"L	**FV31M363678-__**	78"L
FV30M363684-__	84"L	**FV31M363684-__**	84"L
FV30M363690-__	90"L	**FV31M363690-__**	90"L
FV30M363696-__	96"L	**FV31M363696-__**	96"L

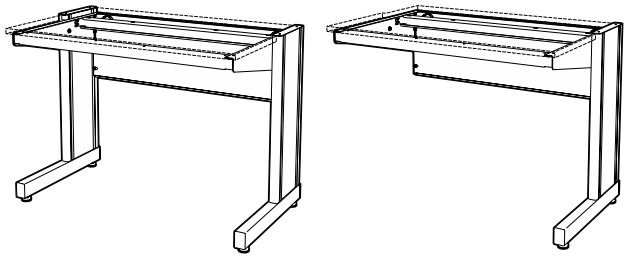

54" High – 36 " Deep

54" High

Starter		Add-on	
FV30M543624-__	24"L	**FV31M543624-__**	24"L
FV30M543630-__	30"L	**FV31M543630-__**	30"L
FV30M543636-__	36"L	**FV31M543636-__**	36"L
FV30M543642-__	42"L	**FV31M543642-__**	42"L
FV30M543648-__	48"L	**FV31M543648-__**	48"L
FV30M543654-__	54"L	**FV31M543654-__**	54"L
FV30M543660-__	60"L	**FV31M543660-__**	60"L
FV30M543666-__	66"L	**FV31M543666-__**	66"L
FV30M543672-__	72"L	**FV31M543672-__**	72"L
FV30M543678-__	78"L	**FV31M543678-__**	78"L
FV30M543684-__	84"L	**FV31M543684-__**	84"L
FV30M543690-__	90"L	**FV31M543690-__**	90"L
FV30M543696-__	96"L	**FV31M543696-__**	96"L

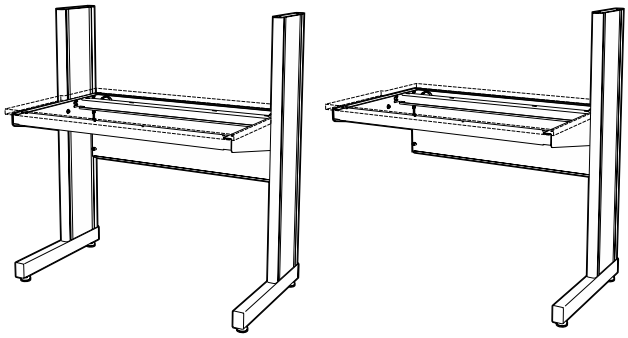

84" High – 36" Deep

84" High

Starter		Add-on	
FV30M843624-__	24"L	**FV31M843624-__**	24"L
FV30M843630-__	30"L	**FV31M843630-__**	30"L
FV30M843636-__	36"L	**FV31M843636-__**	36"L
FV30M843642-__	42"L	**FV31M843642-__**	42"L
FV30M843648-__	48"L	**FV31M843648-__**	48"L
FV30M843654-__	54"L	**FV31M843654-__**	54"L
FV30M843660-__	60"L	**FV31M843660-__**	60"L
FV30M843666-__	66"L	**FV31M843666-__**	66"L
FV30M843672-__	72"L	**FV31M843672-__**	72"L
FV30M843678-__	78"L	**FV31M843678-__**	78"L
FV30M843684-__	84"L	**FV31M843684-__**	84"L
FV30M843690-__	90"L	**FV31M843690-__**	90"L
FV30M843696-__	96"L	**FV31M843696-__**	96"L

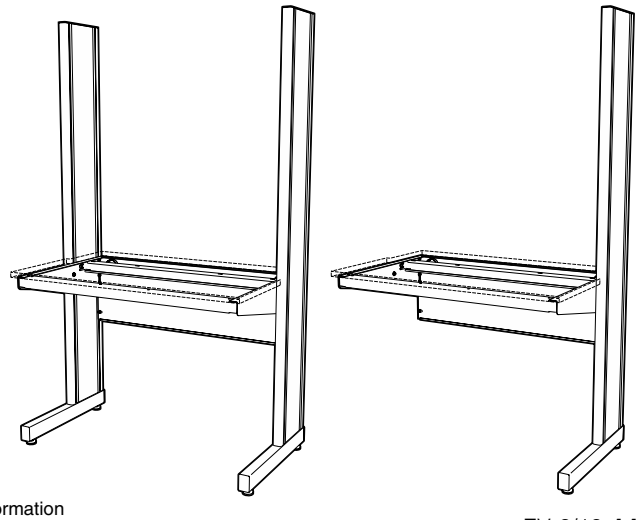

Illustrations and specifications are based on most current design and production information available. Kewaunee reserves the right to make changes at any time without notice.

Double-sided – 12" Column Modules

Double-sided 12" Column Workstations are available in three heights; 36", 54", and 84", three depths; 48", 60" and 72", and in lengths as shown — in both starter assemblies and add-on assemblies. Starter assemblies consist of two columns, two worksurface support frames, and all required hardware. Add-on assemblies consist of one column, two worksurface support frames, and all required hardware. Workstation modules ship knocked-down for assembly in the field.

Work Tops must be specified separately. (see page 15)

36" High – 48" Deep

Starter		Add-on	
FV40M364824-__	24"L	FV41M364824-__	24"L
FV40M364830-__	30"L	FV41M364830-__	30"L
FV40M364836-__	36"L	FV41M364836-__	36"L
FV40M364842-__	42"L	FV41M364842-__	42"L
FV40M364848-__	48"L	FV41M364848-__	48"L
FV40M364854-__	54"L	FV41M364854-__	54"L
FV40M364860-__	60"L	FV41M364860-__	60"L
FV40M364866-__	66"L	FV41M364866-__	66"L
FV40M364872-__	72"L	FV41M364872-__	72"L
FV40M364878-__	78"L	FV41M364878-__	78"L
FV40M364884-__	84"L	FV41M364884-__	84"L
FV40M364890-__	90"L	FV41M364890-__	90"L
FV40M364896-__	96"L	FV41M364896-__	96"L

36" High – 60" Deep

Starter		Add-on	
FV40M366024-__	24"L	FV41M366024-__	24"L
FV40M366030-__	30"L	FV41M366030-__	30"L
FV40M366036-__	36"L	FV41M366036-__	36"L
FV40M366042-__	42"L	FV41M366042-__	42"L
FV40M366048-__	48"L	FV41M366048-__	48"L
FV40M366054-__	54"L	FV41M366054-__	54"L
FV40M366060-__	60"L	FV41M366060-__	60"L
FV40M366066-__	66"L	FV41M366066-__	66"L
FV40M366072-__	72"L	FV41M366072-__	72"L
FV40M366078-__	78"L	FV41M366078-__	78"L
FV40M366084-__	84"L	FV41M366084-__	84"L
FV40M366090-__	90"L	FV41M366090-__	90"L
FV40M366096-__	96"L	FV41M366096-__	96"L

54" High – 48" Deep

Starter		Add-on	
FV40M544824-__	24"L	FV41M544824-__	24"L
FV40M544830-__	30"L	FV41M544830-__	30"L
FV40M544836-__	36"L	FV41M544836-__	36"L
FV40M544842-__	42"L	FV41M544842-__	42"L
FV40M544848-__	48"L	FV41M544848-__	48"L
FV40M544854-__	54"L	FV41M544854-__	54"L
FV40M544860-__	60"L	FV41M544860-__	60"L
FV40M544866-__	66"L	FV41M544866-__	66"L
FV40M544872-__	72"L	FV41M544872-__	72"L
FV40M544878-__	78"L	FV41M544878-__	78"L
FV40M544884-__	84"L	FV41M544884-__	84"L
FV40M544890-__	90"L	FV41M544890-__	90"L
FV40M544896-__	96"L	FV41M544896-__	96"L

54" High – 60" Deep

Starter		Add-on	
FV40M546024-__	24"L	FV41M546024-__	24"L
FV40M546030-__	30"L	FV41M546030-__	30"L
FV40M546036-__	36"L	FV41M546036-__	36"L
FV40M546042-__	42"L	FV41M546042-__	42"L
FV40M546048-__	48"L	FV41M546048-__	48"L
FV40M546054-__	54"L	FV41M546054-__	54"L
FV40M546060-__	60"L	FV41M546060-__	60"L
FV40M546066-__	66"L	FV41M546066-__	66"L
FV40M546072-__	72"L	FV41M546072-__	72"L
FV40M546078-__	78"L	FV41M546078-__	78"L
FV40M546084-__	84"L	FV41M546084-__	84"L
FV40M546090-__	90"L	FV41M546090-__	90"L
FV40M546096-__	96"L	FV41M546096-__	96"L

84" High – 48" Deep

Starter		Add-on	
FV40M844824-__	24"L	FV41M844824-__	24"L
FV40M844830-__	30"L	FV41M844830-__	30"L
FV40M844836-__	36"L	FV41M844836-__	36"L
FV40M844842-__	42"L	FV41M844842-__	42"L
FV40M844848-__	48"L	FV41M844848-__	48"L
FV40M844854-__	54"L	FV41M844854-__	54"L
FV40M844860-__	60"L	FV41M844860-__	60"L
FV40M844866-__	66"L	FV41M844866-__	66"L
FV40M844872-__	72"L	FV41M844872-__	72"L
FV40M844878-__	78"L	FV41M844878-__	78"L
FV40M844884-__	84"L	FV41M844884-__	84"L
FV40M844890-__	90"L	FV41M844890-__	90"L
FV40M844896-__	96"L	FV41M844896-__	96"L

84" High – 60" Deep

Starter		Add-on	
FV40M846024-__	24"L	FV41M846024-__	24"L
FV40M846030-__	30"L	FV41M846030-__	30"L
FV40M846036-__	36"L	FV41M846036-__	36"L
FV40M846042-__	42"L	FV41M846042-__	42"L
FV40M846048-__	48"L	FV41M846048-__	48"L
FV40M846054-__	54"L	FV41M846054-__	54"L
FV40M846060-__	60"L	FV41M846060-__	60"L
FV40M846066-__	66"L	FV41M846066-__	66"L
FV40M846072-__	72"L	FV41M846072-__	72"L
FV40M846078-__	78"L	FV41M846078-__	78"L
FV40M846084-__	84"L	FV41M846084-__	84"L
FV40M846090-__	90"L	FV41M846090-__	90"L
FV40M846096-__	96"L	FV41M846096-__	96"L

Illustrations and specifications are based on most current design and production information available. Kewaunee reserves the right to make changes at any time without notice.

Double-sided – 12" Column Modules

Workstation Options:
The two final digits in the part numbers specifies the Accent Panel Material option and the Foot option for the workstation.

Accent Panel Material Options:
0 = Plastic Laminate Panel
1 = Powder Coated Steel Panel

Example: FV40M364824-**11** = with Steel Accent Strip and 4" Caster

Workstation Foot Options:
0 = 1½" Leveling Glide
1 = 4" Caster
2 = 4" Heavy Duty Leveling Caster

36" High – 72" Deep — 36"High

Starter		Add-on	
FV40M367224-__	24"L	**FV41M367224-__**	24"L
FV40M367230-__	30"L	**FV41M367230-__**	30"L
FV40M367236-__	36"L	**FV41M367236-__**	36"L
FV40M367242-__	42"L	**FV41M367242-__**	42"L
FV40M367248-__	48"L	**FV41M367248-__**	48"L
FV40M367254-__	54"L	**FV41M367254-__**	54"L
FV40M367260-__	60"L	**FV41M367260-__**	60"L
FV40M367266-__	66"L	**FV41M367266-__**	66"L
FV40M367272-__	72"L	**FV41M367272-__**	72"L
FV40M367278-__	78"L	**FV41M367278-__**	78"L
FV40M367284-__	84"L	**FV41M367284-__**	84"L
FV40M367290-__	90"L	**FV41M367290-__**	90"L
FV40M367296-__	96"L	**FV41M367296-__**	96"L

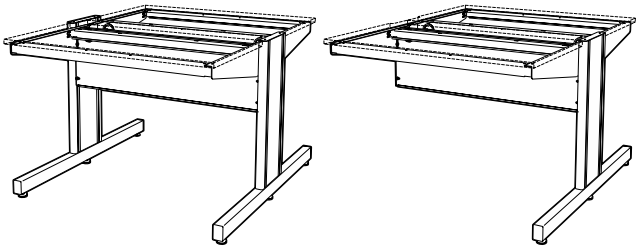

54" High – 72" Deep — 54" High

Starter		Add-on	
FV40M547224-__	24"L	**FV41M547224-__**	24"L
FV40M547230-__	30"L	**FV41M547230-__**	30"L
FV40M547236-__	36"L	**FV41M547236-__**	36"L
FV40M547242-__	42"L	**FV41M547242-__**	42"L
FV40M547248-__	48"L	**FV41M547248-__**	48"L
FV40M547254-__	54"L	**FV41M547254-__**	54"L
FV40M547260-__	60"L	**FV41M547260-__**	60"L
FV40M547266-__	66"L	**FV41M547266-__**	66"L
FV40M547272-__	72"L	**FV41M547272-__**	72"L
FV40M547278-__	78"L	**FV41M547278-__**	78"L
FV40M547284-__	84"L	**FV41M547284-__**	84"L
FV40M547290-__	90"L	**FV41M547290-__**	90"L
FV40M547296-__	96"L	**FV41M547296-__**	96"L

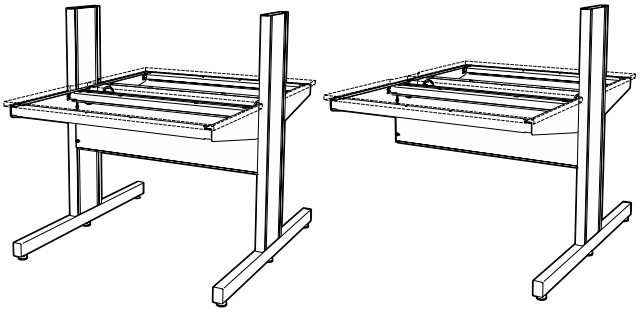

84" High – 72" Deep — 84" High

Starter		Add-on	
FV40M847224-__	24"L	**FV41M847224-__**	24"L
FV40M847230-__	30"L	**FV41M847230-__**	30"L
FV40M847236-__	36"L	**FV41M847236-__**	36"L
FV40M847242-__	42"L	**FV41M847242-__**	42"L
FV40M847248-__	48"L	**FV41M847248-__**	48"L
FV40M847254-__	54"L	**FV41M847254-__**	54"L
FV40M847260-__	60"L	**FV41M847260-__**	60"L
FV40M847266-__	66"L	**FV41M847266-__**	66"L
FV40M847272-__	72"L	**FV41M847272-__**	72"L
FV40M847278-__	78"L	**FV41M847278-__**	78"L
FV40M847284-__	84"L	**FV41M847284-__**	84"L
FV40M847290-__	90"L	**FV41M847290-__**	90"L
FV40M847296-__	96"L	**FV41M847296-__**	96"L

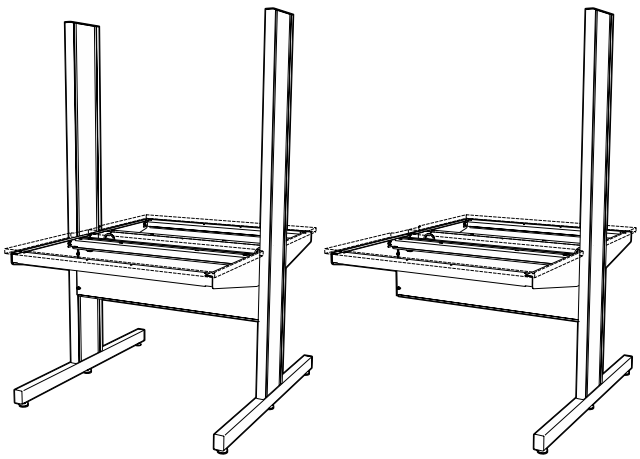

Illustrations and specifications are based on most current design and production information available. Kewaunee reserves the right to make changes at any time without notice.

Work Tops

Work Tops are available in four materials, 1" thick and with or without an extra 1" of length on either the left, right, or both ends to extend the length of the top to be even with the outside of the column. See page 4 for available color options.

Work Top Material Codes:

P = Plastic Laminate
R = Kemresin
E = ESD Laminate
T = Phenolic Resin

Example: FV90**P**013060-00
Standard length Plastic Laminate top

Extended Length Option:

0 = Standard Length
L = Extended on Left End
R = Extended on Right End
B = Extended on Both Ends

Example: FV91P016060-0**B**
Work top extended both ends

Work Top for Single-sided 9" Column Workstation

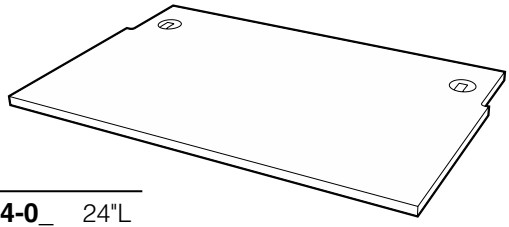

24" Deep		30" Deep		36" Deep	
FV90□012424-0_	24"L	FV90□013024-0_	24"L	FV90□013624-0_	24"L
FV90□012430-0_	30"L	FV90□013030-0_	30"L	FV90□013630-0_	30"L
FV90□012436-0_	36"L	FV90□013036-0_	36"L	FV90□013636-0_	36"L
FV90□012442-0_	42"L	FV90□013042-0_	42"L	FV90□013642-0_	42"L
FV90□012448-0_	48"L	FV90□013048-0_	48"L	FV90□013648-0_	48"L
FV90□012454-0_	54"L	FV90□013054-0_	54"L	FV90□013654-0_	54"L
FV90□012460-0_	60"L	FV90□013060-0_	60"L	FV90□013660-0_	60"L
FV90□012466-0_	66"L	FV90□013066-0_	66"L	FV90□013666-0_	66"L
FV90□012472-0_	72"L	FV90□013072-0_	72"L	FV90□013672-0_	72"L
FV90□012478-0_	78"L	FV90□013078-0_	78"L	FV90□013678-0_	78"L
FV90□012484-0_	84"L	FV90□013084-0_	84"L	FV90□013684-0_	84"L
FV90□012490-0_	90"L	FV90□013090-0_	90"L	FV90□013690-0_	90"L
FV90□012496-0_	96"L	FV90□013096-0_	96"L	FV90□013696-0_	96"L

Work Top for Double-sided 9" Column Workstation

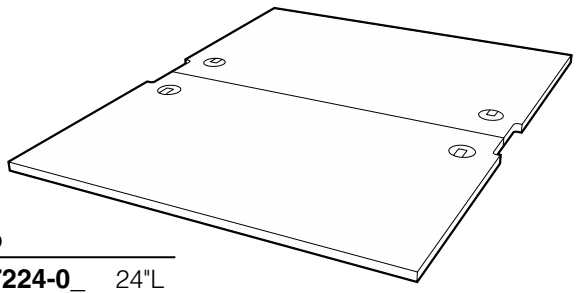

48" Deep		60" Deep		72" Deep	
FV91□014824-0_	24"L	FV91□016024-0_	24"L	FV91□017224-0_	24"L
FV91□014830-0_	30"L	FV91□016030-0_	30"L	FV91□017230-0_	30"L
FV91□014836-0_	36"L	FV91□016036-0_	36"L	FV91□017236-0_	36"L
FV91□014842-0_	42"L	FV91□016042-0_	42"L	FV91□017242-0_	42"L
FV91□014848-0_	48"L	FV91□016048-0_	48"L	FV91□017248-0_	48"L
FV91□014854-0_	54"L	FV91□016054-0_	54"L	FV91□017254-0_	54"L
FV91□014860-0_	60"L	FV91□016060-0_	60"L	FV91□017260-0_	60"L
FV91□014866-0_	66"L	FV91□016066-0_	66"L	FV91□017266-0_	66"L
FV91□014872-0_	72"L	FV91□016072-0_	72"L	FV91□017272-0_	72"L
FV91□014878-0_	78"L	FV91□016078-0_	78"L	FV91□017278-0_	78"L
FV91□014884-0_	84"L	FV91□016084-0_	84"L	FV91□017284-0_	84"L
FV91□014890-0_	90"L	FV91□016090-0_	90"L	FV91□017290-0_	90"L
FV91□014896-0_	96"L	FV91□016096-0_	96"L	FV91□017296-0_	96"L

Illustrations and specifications are based on most current design and production information available. Kewaunee reserves the right to make changes at any time without notice.

Work Tops

Work Tops are available in four materials and with or without an extra 1" of length on either the left, right, or both ends to extend the length of the top to be even with the outside of the column. See page 4 for available color options.

Work Top Material Codes:

P = Plastic Laminate
R = Kemresin
E = ESD Laminate
T = Phenolic Resin

Example: FV92**P**013060-00
Standard length Plastic Laminate top

Extended Length Option:

0 = Standard Length
L = Extended on Left End
R = Extended on Right End
B = Extended on Both Ends

Example: FV93P016060-0**B**
Work top extended both ends

Work Top for Single-sided 12" Column Workstation

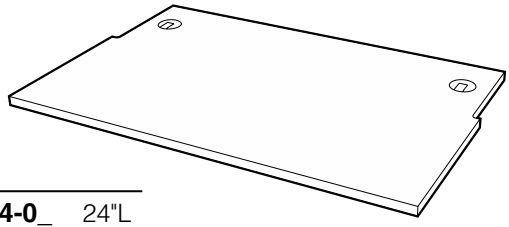

24" Deep		30" Deep		36" Deep	
FV92□012424-0_	24"L	**FV92□013024-0_**	24"L	**FV92□013624-0_**	24"L
FV92□012430-0_	30"L	**FV92□013030-0_**	30"L	**FV92□013630-0_**	30"L
FV92□012436-0_	36"L	**FV92□013036-0_**	36"L	**FV92□013636-0_**	36"L
FV92□012442-0_	42"L	**FV92□013042-0_**	42"L	**FV92□013642-0_**	42"L
FV92□012448-0_	48"L	**FV92□013048-0_**	48"L	**FV92□013648-0_**	48"L
FV92□012454-0_	54"L	**FV92□013054-0_**	54"L	**FV92□013654-0_**	54"L
FV92□012460-0_	60"L	**FV92□013060-0_**	60"L	**FV92□013660-0_**	60"L
FV92□012466-0_	66"L	**FV92□013066-0_**	66"L	**FV92□013666-0_**	66"L
FV92□012472-0_	72"L	**FV92□013072-0_**	72"L	**FV92□013672-0_**	72"L
FV92□012478-0_	78"L	**FV92□013078-0_**	78"L	**FV92□013678-0_**	78"L
FV92□012484-0_	84"L	**FV92□013084-0_**	84"L	**FV92□013684-0_**	84"L
FV92□012490-0_	90"L	**FV92□013090-0_**	90"L	**FV92□013690-0_**	90"L
FV92□012496-0_	96"L	**FV92□013096-0_**	96"L	**FV92□013696-0_**	96"L

Work Top for Double-sided 12" Column Workstation

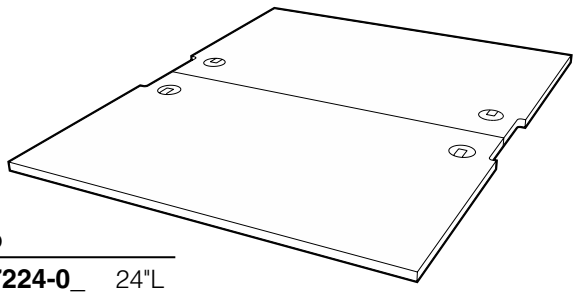

48" Deep		60" Deep		72" Deep	
FV93□014824-0_	24"L	**FV93□016024-0_**	24"L	**FV93□017224-0_**	24"L
FV93□014830-0_	30"L	**FV93□016030-0_**	30"L	**FV93□017230-0_**	30"L
FV93□014836-0_	36"L	**FV93□016036-0_**	36"L	**FV93□017236-0_**	36"L
FV93□014842-0_	42"L	**FV93□016042-0_**	42"L	**FV93□017242-0_**	42"L
FV93□014848-0_	48"L	**FV93□016048-0_**	48"L	**FV93□017248-0_**	48"L
FV93□014854-0_	54"L	**FV93□016054-0_**	54"L	**FV93□017254-0_**	54"L
FV93□014860-0_	60"L	**FV93□016060-0_**	60"L	**FV93□017260-0_**	60"L
FV93□014866-0_	66"L	**FV93□016066-0_**	66"L	**FV93□017266-0_**	66"L
FV93□014872-0_	72"L	**FV93□016072-0_**	72"L	**FV93□017272-0_**	72"L
FV93□014878-0_	78"L	**FV93□016078-0_**	78"L	**FV93□017278-0_**	78"L
FV93□014884-0_	84"L	**FV93□016084-0_**	84"L	**FV93□017284-0_**	84"L
FV93□014890-0_	90"L	**FV93□016090-0_**	90"L	**FV93□017290-0_**	90"L
FV93□014896-0_	96"L	**FV93□016096-0_**	96"L	**FV93□017296-0_**	96"L

Illustrations and specifications are based on most current design and production information available. Kewaunee reserves the right to make changes at any time without notice.

Corner Modules – 9" Column

Evolution Corner Modules are designed to be added to two starter workstation modules to create an "L" shaped assembly. They are available in two different configurations; square or diagonal and in three depths; 24", 30", and 36" to match workstation depths.

Square Corner Support Frames include: two support brackets, and an adustable height rear corner support leg.

Diagonal Corner Support Frames include: two support brackets, a front apron, two modesty panels, and an adjustable height rear corner support leg.

Work Tops must be specified separately.

Work Tops are available in four materials and with or without an extra 1" of length on either the left or right ends to extend the length of the top to be even with the outside of the column. See page 4 for available color options.

Work Top Material Codes:

P = Plastic Laminate
R = Kemresin
E = ESD Laminate
T = Phenolic Resin

Example: FV14**P**013032-00
Standard length Plastic Laminate top

Extended Length Option:

0 = Standard Length
L = Extended on Left End
R = Extended on Right End

Example: FV15T013046-0**R**
Phenolic Resin work top extended right end

Square Corner Support Frame — 9" Column

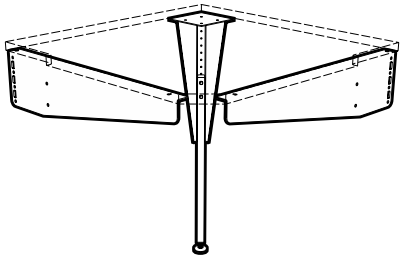

FV14M062426-00 24"D x 26"L
FV14M063032-00 30"D x 32"L
FV14M063638-00 36"D x 38"L

Square Corner Work Top — 9" Column

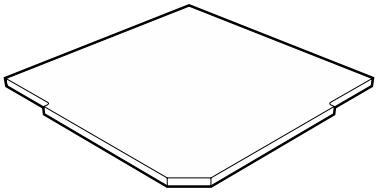

FV94□012426-__ 24"D x 26"L
FV94 013032-__ 30"D x 32"L
FV94□013638-__ 36"D x 38"L

Diagonal Corner Support Frame — 9" Column

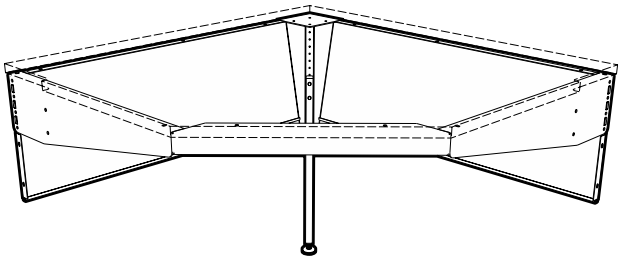

FV15M062440-00 24"D x 40"L
FV15M063046-00 30"D x 46"L
FV15M063652-00 36"D x 52"L

Diagonal Corner Work Top — 9" Column

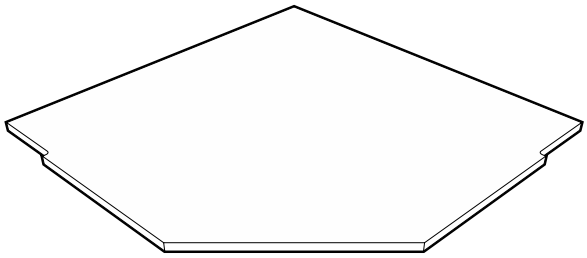

FV95□012440-__ 24"D x 40"L
FV95□013046-__ 30"D x 46"L
FV95□013652-__ 36"D x 52"L

Illustrations and specifications are based on most current design and production information available. Kewaunee reserves the right to make changes at any time without notice.

KEWAUNEE Scientific Corporation

Corner Modules – 12" Column

Evolution Corner Modules are designed to be added to two starter workstation modules to create an "L" shaped assembly. They are available in two different configurations; square or diagonal and in three depths; 24", 30", and 36" to match workstation depths.

Square Corner Support Frames include: two support brackets, and an adustable height rear corner support leg.

Diagonal Corner Support Frames include: two support brackets, a front apron, two modesty panels, and an adjustable height rear corner support leg.

Work Tops must be specified separately.

Work Tops are available in four materials and with or without an extra 1" of length on either the left or right ends to extend the length of the top to be even with the outside of the column. See page 4 for available color options.

Work Top Material Codes:

P = Plastic Laminate
R = Kemresin
E = ESD Laminate
T = Phenolic Resin

Example: FV14**P**013032-00
Standard length Plastic Laminate top

Extended Length Option:

0 = Standard Length
L = Extended on Left End
R = Extended on Right End

Example: FV15T013046-0**R**
Phenolic Resin work top extended right end

Square Corner Support Frame — 12" Column

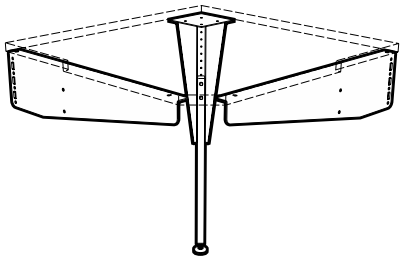

FV34M062426-00 24"D x 26"L
FV34M063032-00 30"D x 32"L
FV34M063638-00 36"D x 38"L

Square Corner Work Top — 12" Column

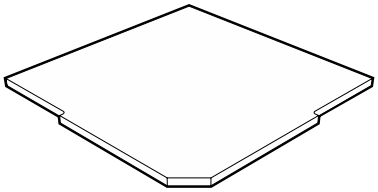

FV96□012426-__ 24"D x 26"L
FV96□013032-__ 30"D x 32"L
FV96□013638-__ 36"D x 38"L

Diagonal Corner Support Frame — 12" Column

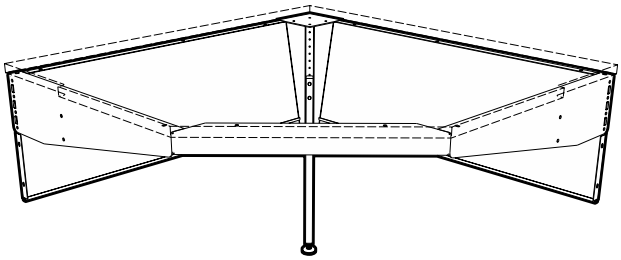

FV35M062440-00 24"D x 40"L
FV35M063046-00 30"D x 46"L
FV35M063652-00 36"D x 52"L

Diagonal Corner Work Top — 12" Column

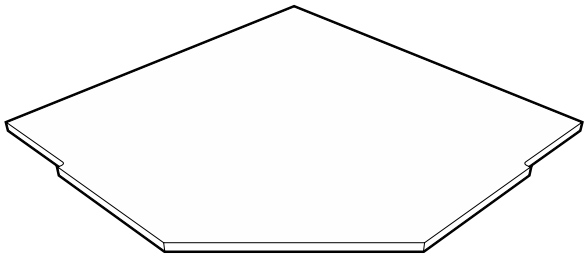

FV97□012440-__ 24"D x 40"L
FV97□013046-__ 30"D x 46"L
FV97□013652-__ 36"D x 52"L

Illustrations and specifications are based on most current design and production information available. Kewaunee reserves the right to make changes at any time without notice.

Worksurface Frames

Worksurface Frames may be used between two stand-alone workstations to create a multi-module assembly.

Each frame assembly consists of two worksurface support brackets, a front worksurface support apron, a modesty panel and all hardward required for assembly.

30" and 36" deep frames also include a rear cabinet hanging rail.

Work Tops are not included and must be specified seperately.
(see page 14)

Worksurface Frame for Single-sided 9" Column Workstation

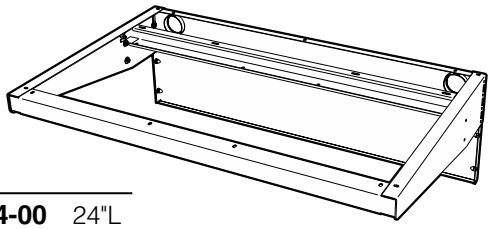

24" Deep		30" Deep		36" Deep	
FV80M062424-00	24"L	**FV80M063024-00**	24"L	**FV80M063624-00**	24"L
FV80M062430-00	30"L	**FV80M063030-00**	30"L	**FV80M063630-00**	30"L
FV80M062436-00	36"L	**FV80M063036-00**	36"L	**FV80M063636-00**	36"L
FV80M062442-00	42"L	**FV80M063042-00**	42"L	**FV80M063642-00**	42"L
FV80M062448-00	48"L	**FV80M063048-00**	48"L	**FV80M063648-00**	48"L
FV80M062454-00	54"L	**FV80M063054-00**	54"L	**FV80M063654-00**	54"L
FV80M062460-00	60"L	**FV80M063060-00**	60"L	**FV80M063660-00**	60"L
FV80M062466-00	66"L	**FV80M063066-00**	66"L	**FV80M063666-00**	66"L
FV80M062472-00	72"L	**FV80M063072-00**	72"L	**FV80M063672-00**	72"L
FV80M062478-00	78"L	**FV80M063078-00**	78"L	**FV80M063678-00**	78"L
FV80M062484-00	84"L	**FV80M063084-00**	84"L	**FV80M063684-00**	84"L
FV80M062490-00	90"L	**FV80M063090-00**	90"L	**FV80M063690-00**	90"L
FV80M062496-00	96"L	**FV80M063096-00**	96"L	**FV80M063696-00**	96"L

Worksurface Frame for Double-sided 9" Column Workstation

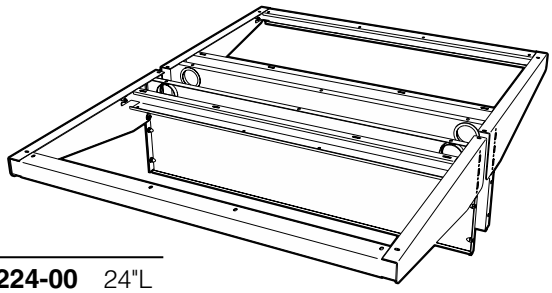

48" Deep		60" Deep		72" Deep	
FV81M064824-00	24"L	**FV81M066024-00**	24"L	**FV81M067224-00**	24"L
FV81M064830-00	30"L	**FV81M066030-00**	30"L	**FV81M067230-00**	30"L
FV81M064836-00	36"L	**FV81M066036-00**	36"L	**FV81M067236-00**	36"L
FV81M064842-00	42"L	**FV81M066042-00**	42"L	**FV81M067242-00**	42"L
FV81M064848-00	48"L	**FV81M066048-00**	48"L	**FV81M067248-00**	48"L
FV81M064854-00	54"L	**FV81M066054-00**	54"L	**FV81M067254-00**	54"L
FV81M064860-00	60"L	**FV81M066060-00**	60"L	**FV81M067260-00**	60"L
FV81M064866-00	66"L	**FV81M066066-00**	66"L	**FV81M067266-00**	66"L
FV81M064872-00	72"L	**FV81M066072-00**	72"L	**FV81M067272-00**	72"L
FV81M064878-00	78"L	**FV81M066078-00**	78"L	**FV81M067278-00**	78"L
FV81M064884-00	84"L	**FV81M066084-00**	84"L	**FV81M067284-00**	84"L
FV81M064890-00	90"L	**FV81M066090-00**	90"L	**FV81M067290-00**	90"L
FV81M064896-00	96"L	**FV81M066096-00**	96"L	**FV81M067296-00**	96"L

Illustrations and specifications are based on most current design and production information available. Kewaunee reserves the right to make changes at any time without notice.

KEWAUNEE Scientific Corporation

Worksurface Frames

Worksurface Frames may be used between two stand-alone workstations to create a multi-module assembly.

Each frame assembly consists of two worksurface support brackets, a front worksurface support apron, a modesty panel and all hardward required for assembly.

30” and 36” deep frames also include a rear cabinet hanging rail.

Work Tops are not included and must be specified seperately. (see page 15)

Worksurface Frame for Single-sided 12" Column Workstation

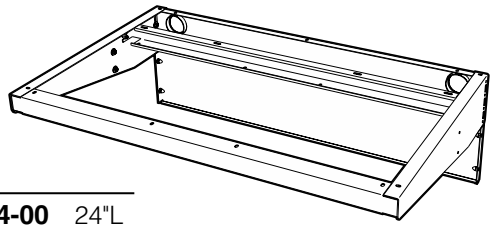

24" Deep		30" Deep		36" Deep	
FV82M062424-00	24"L	**FV82M063024-00**	24"L	**FV82M063624-00**	24"L
FV82M062430-00	30"L	**FV82M063030-00**	30"L	**FV82M063630-00**	30"L
FV82M062436-00	36"L	**FV82M063036-00**	36"L	**FV82M063636-00**	36"L
FV82M062442-00	42"L	**FV82M063042-00**	42"L	**FV82M063642-00**	42"L
FV82M062448-00	48"L	**FV82M063048-00**	48"L	**FV82M063648-00**	48"L
FV82M062454-00	54"L	**FV82M063054-00**	54"L	**FV82M063654-00**	54"L
FV82M062460-00	60"L	**FV82M063060-00**	60"L	**FV82M063660-00**	60"L
FV82M062466-00	66"L	**FV82M063066-00**	66"L	**FV82M063666-00**	66"L
FV82M062472-00	72"L	**FV82M063072-00**	72"L	**FV82M063672-00**	72"L
FV82M062478-00	78"L	**FV82M063078-00**	78"L	**FV82M063678-00**	78"L
FV82M062484-00	84"L	**FV82M063084-00**	84"L	**FV82M063684-00**	84"L
FV82M062490-00	90"L	**FV82M063090-00**	90"L	**FV82M063690-00**	90"L
FV82M062496-00	96"L	**FV82M063096-00**	96"L	**FV82M063696-00**	96"L

Worksurface Frame for Double-sided 12" Column Workstation

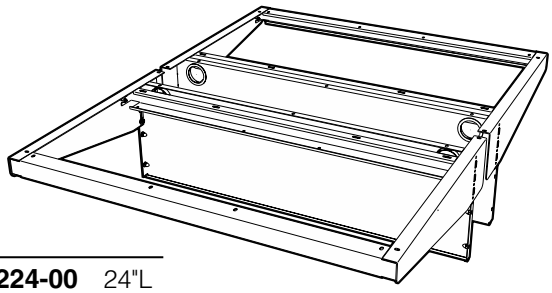

48" Deep		60" Deep		72" Deep	
FV83M064824-00	24"L	**FV83M066024-__**	24"L	**FV83M067224-00**	24"L
FV83M064830-00	30"L	**FV83M066030-__**	30"L	**FV83M067230-00**	30"L
FV83M064836-00	36"L	**FV83M066036-__**	36"L	**FV83M067236-00**	36"L
FV83M064842-00	42"L	**FV83M066042-__**	42"L	**FV83M067242-00**	42"L
FV83M064848-00	48"L	**FV83M066048-__**	48"L	**FV83M067248-00**	48"L
FV83M064854-00	54"L	**FV83M066054-__**	54"L	**FV83M067254-00**	54"L
FV83M064860-00	60"L	**FV83M066060-__**	60"L	**FV83M067260-00**	60"L
FV83M064866-00	66"L	**FV83M066066-__**	66"L	**FV83M067266-00**	66"L
FV83M064872-00	72"L	**FV83M066072-__**	72"L	**FV83M067272-00**	72"L
FV83M064878-00	78"L	**FV83M066078-__**	78"L	**FV83M067278-00**	78"L
FV83M064884-00	84"L	**FV83M066084-__**	84"L	**FV83M067284-00**	84"L
FV83M064890-00	90"L	**FV83M066090-__**	90"L	**FV83M067290-00**	90"L
FV83M064896-00	96"L	**FV83M066096-__**	96"L	**FV83M067296-00**	96"L

Illustrations and specifications are based on most current design and production information available. Kewaunee reserves the right to make changes at any time without notice.

Columns

Columns are available individually for replacement purposes and custom applications.

The two final digits in the part number specifies the Accent Strip Material option and the Foot option for the column.

Accent Strip Material Options:

0 = Plastic Laminate Panel
1 = Powder Coated Steel Panel

Workstation Foot Options:

0 = 1½" Leveling Glide
1 = 4" Caster
2 = 4" Heavy Duty Leveling Caster

Example: FV01M36301-**11** = with Steel Accent Panel and 4" Caster

9" Single-sided Columns

36" High

FV01M362402-__ 24"D
FV01M363002-__ 30"D
FV01M363602-__ 36"D

54" High

FV01M542402-__ 24”D
FV01M543002-__ 30”D
FV01M543602-__ 36”D

84" High

FV01M842402-__ 24”D
FV01M843002-__ 30”D
FV01M843602-__ 36”D

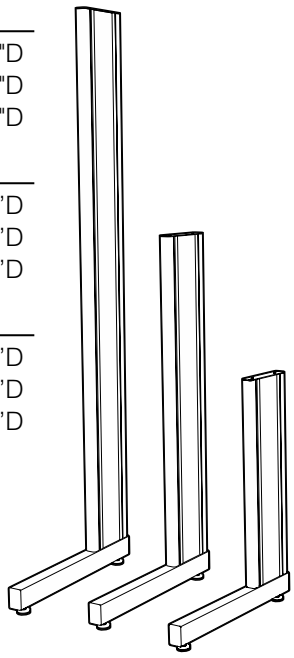

9" Double-sided Columns

36" High

FV02M364802-__ 48"D
FV02M366002-__ 60"D
FV02M367202-__ 72"D

54" High

FV02M544802-__ 48”D
FV02M546002-__ 60”D
FV02M547202-__ 72”D

84" High

FV02M844802-__ 48”D
FV02M846002-__ 60”D
FV02M847202-__ 72”D

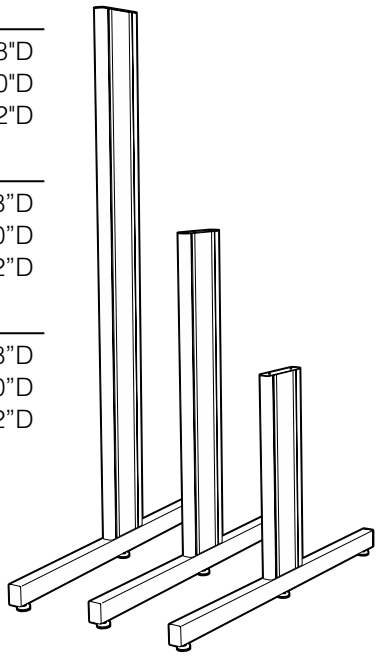

12" Single-sided Columns

36" High

FV03M362402-__ 24"D
FV03M363002-__ 30"D
FV03M363602-__ 36"D

54" High

FV03M542402-__ 24”D
FV03M543002-__ 30”D
FV03M543602-__ 36”D

84" High

FV03M842402-__ 24”D
FV03M843002-__ 30”D
FV03M843602-__ 36”D

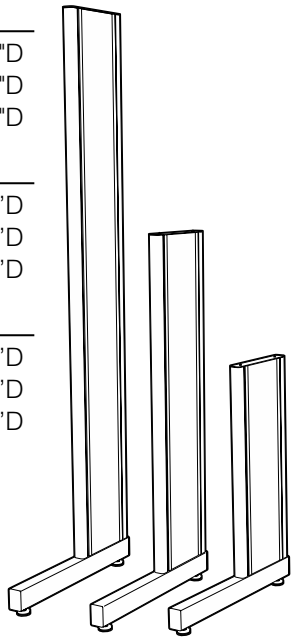

12" Double-sided Columns

36" High

FV04M364802-__ 48"D
FV04M366002-__ 60"D
FV04M367202-__ 72"D

54" High

FV04M544802-__ 48”D
FV04M546002-__ 60”D
FV04M547202-__ 72”D

84" High

FV04M844802-__ 48”D
FV04M846002-__ 60”D
FV04M847202-__ 72”D

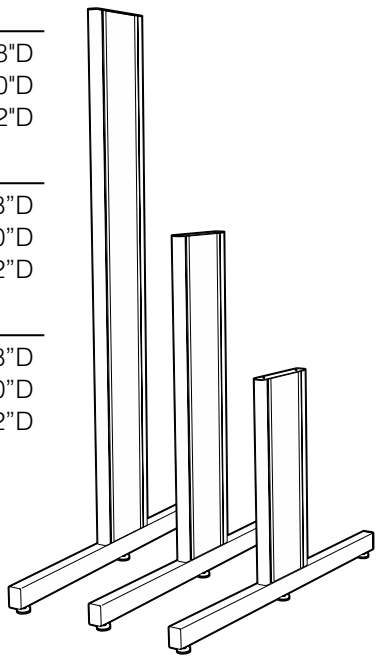

Illustrations and specifications are based on most current design and production information available. Kewaunee reserves the right to make changes at any time without notice.

KEWAUNEE Scientific Corporation

Evolution Shelving

Shelf Assembly Part Number Explanation

FV 60 M 031536 - 00

System Type
FV = Evolution

Shelf Type
57 = Universal – Single-sided Undermount
58 = Universal – Single-sided Bookend
59 = Universal – Double-sided Undermount
60 = 9" Column – Single-sided Undermount
61 = 12" Column – Single-sided Undermount
62 = 9" Column – Single-sided Bookend
63 = 12" Column – Single-sided Bookend
64 = 9" Column – Double-sided Bookend
65 = 12" Column – Double-sided Bookend
66 = 9" Column – Center Undermount
67 = 12" Column – Center Undermount

Shelf Material
M = Powder Coated Steel

Shelf Bracket Height
Standard Heights: 2" – 3" – 5"

Shelf Depth
Standard Depths: 12" – 15" – 18" – 24"
Center Undermount Shelving
Standard Depths: 12" – 15" – 18" – 24" – 30" – 36"

Shelf Length
Standard Lengths: 24" - 30" - 36" - 42" - 48"
54" - 60" - 66" - 72" - 78" - 84" - 90" - 96"

Separator

Options (see below)

Shelf Options

FV 60 M 031536 - 00

Shelf Lip Option
00 = No Shelf Lips
01 = One Shelf Lip
02 = Two Shelf Lips (front & back)
03 = Three Shelf Lips (for FV66 Center Shelving only)

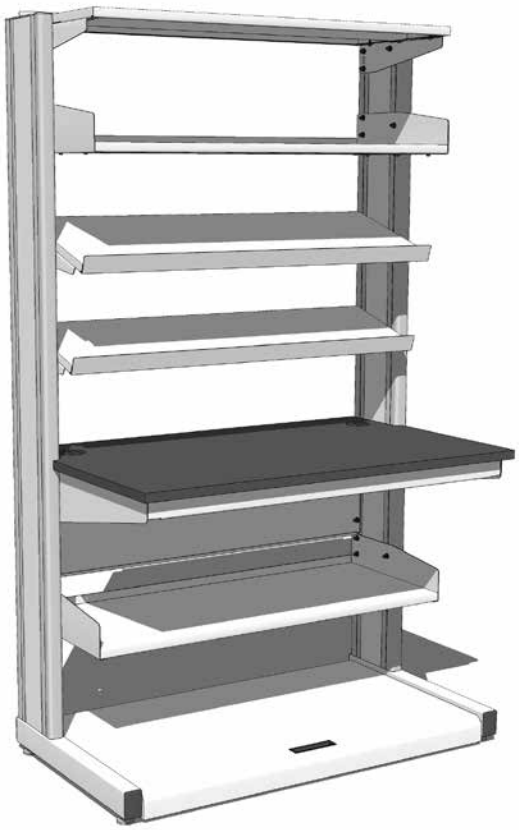

Illustrations and specifications are based on most current design and production information available. Kewaunee reserves the right to make changes at any time without notice.

Single-sided Shelving for 9" Column

Single-sided Undermount Shelves consist of a pair of powder coated, 12 gauge steel shelf brackets and a 1" thick, powder coated, 14 gauge steel shelf. Shelves are infinitely height adjustable from above the worksurface to the top of the column and have limited mounting below worksurface. Shelves mount flush with the rear of workstation columns and are available with or without retaining lips.

Shelf Retaining Lip Options:

00 = No shelf lip
01 = Shelf Lip on one edge
02 = Shelf Lip on both edges

Example: FV57M031236-**01** = Shelf with Lip on one edge

Single-sided Undermount Shelving

12" Deep		15" Deep	
FV57M031224-__	24"L	**FV57M031524-__**	24"L
FV57M031230-__	30"L	**FV57M031530-__**	30"L
FV57M031236-__	36"L	**FV57M031536-__**	36"L
FV57M031242-__	42"L	**FV57M031542-__**	42"L
FV57M031248-__	48"L	**FV57M031548-__**	48"L
FV57M031254-__	54"L	**FV57M031554-__**	54"L
FV57M031260-__	60"L	**FV57M031560-__**	60"L
FV57M031266-__	66"L	**FV57M031566-__**	66"L
FV57M031272-__	72"L	**FV57M031572-__**	72"L
FV57M031278-__	78"L	**FV57M031578-__**	78"L
FV57M031284-__	84"L	**FV57M031584-__**	84"L
FV57M031290-__	90"L	**FV57M031590-__**	90"L
FV57M031296-__	96"L	**FV57M031596-__**	96"L

FV57 Shelving Assemblies may be used on either 9" or 12" column workstations

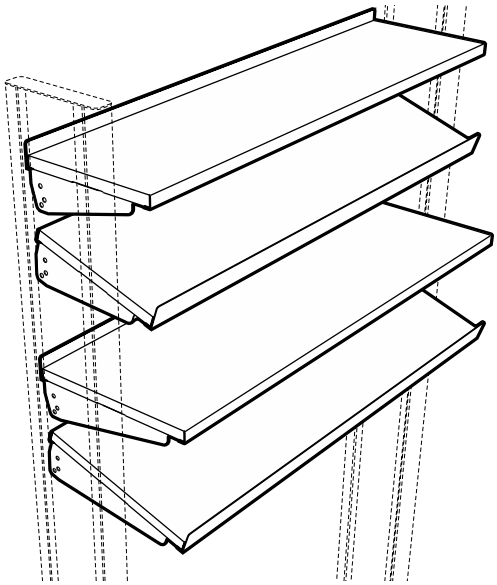

18" Deep		24" Deep	
FV60M031824-__	24"L	**FV60M032424-__**	24"L
FV60M031830-__	30"L	**FV60M032430-__**	30"L
FV60M031836-__	36"L	**FV60M032436-__**	36"L
FV60M031842-__	42"L	**FV60M032442-__**	42"L
FV60M031848-__	48"L	**FV60M032448-__**	48"L
FV60M031854-__	54"L	**FV60M032454-__**	54"L
FV60M031860-__	60"L	**FV60M032460-__**	60"L
FV60M031866-__	66"L	**FV60M032466-__**	66"L
FV60M031872-__	72"L	**FV60M032472-__**	72"L
FV60M031878-__	78"L	**FV60M032478-__**	78"L
FV60M031884-__	84"L	**FV60M032484-__**	84"L
FV60M031890-__	90"L	**FV60M032490-__**	90"L
FV60M031896-__	96"L	**FV60M032496-__**	96"L

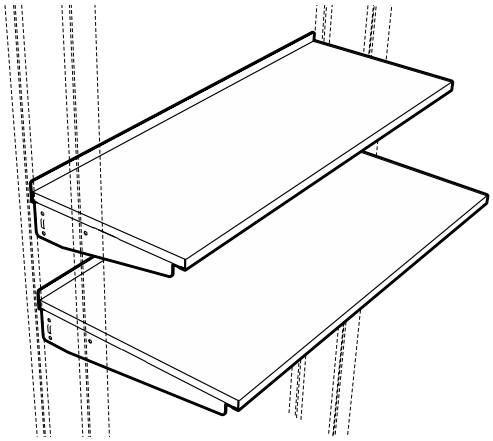

Illustrations and specifications are based on most current design and production information available. Kewaunee reserves the right to make changes at any time without notice.

KEWAUNEE Scientific Corporation

Single-sided Shelving for 9" Column

Single-sided Bookend Shelves consist of a pair of powder coated, 5" high, 12 gauge steel shelf brackets and a 1" thick, powder coated, 14 gauge steel shelf. Shelves are infinitely height adjustable from above the worksurface to the top of the column and have limited mounting below worksurface. Shelves mount flush with the rear of workstation columns and are available with or without retaining lips.

Shelf Retaining Lip Options:

00 = No shelf lip
01 = Shelf Lip on one edge
02 = Shelf Lip on both edges

Example: FV58M051536-**00** = Shelf without Retaining Lips

Single-sided Bookend Shelving

12" Deep		15" Deep	
FV58M051224-__	24"L	**FV58M051524-__**	24"L
FV58M051230-__	30"L	**FV58M051530-__**	30"L
FV58M051236-__	36"L	**FV58M051536-__**	36"L
FV58M051242-__	42"L	**FV58M051542-__**	42"L
FV58M051248-__	48"L	**FV58M051548-__**	48"L
FV58M051254-__	54"L	**FV58M051554-__**	54"L
FV58M051260-__	60"L	**FV58M051560-__**	60"L
FV58M051266-__	66"L	**FV58M051566-__**	66"L
FV58M051272-__	72"L	**FV58M051572-__**	72"L
FV58M051278-__	78"L	**FV58M051578-__**	78"L
FV58M051284-__	84"L	**FV58M051584-__**	84"L
FV58M051290-__	90"L	**FV58M051590-__**	90"L
FV58M051296-__	96"L	**FV58M051596-__**	96"L

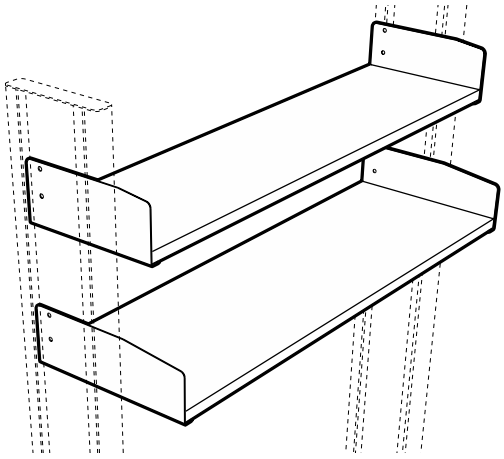

FV58 Shelving Assemblies may be used on either 9" or 12" column workstations

18" Deep		24" Deep	
FV62M051824-__	24"L	**FV62M052424-__**	24"L
FV62M051830-__	30"L	**FV62M052430-__**	30"L
FV62M051836-__	36"L	**FV62M052436-__**	36"L
FV62M051842-__	42"L	**FV62M052442-__**	42"L
FV62M051848-__	48"L	**FV62M052448-__**	48"L
FV62M051854-__	54"L	**FV62M052454-__**	54"L
FV62M051860-__	60"L	**FV62M052460-__**	60"L
FV62M051866-__	66"L	**FV62M052466-__**	66"L
FV62M051872-__	72"L	**FV62M052472-__**	72"L
FV62M051878-__	78"L	**FV62M052478-__**	78"L
FV62M051884-__	84"L	**FV62M052484-__**	84"L
FV62M051890-__	90"L	**FV62M052490-__**	90"L
FV62M051896-__	96"L	**FV62M052496-__**	96"L

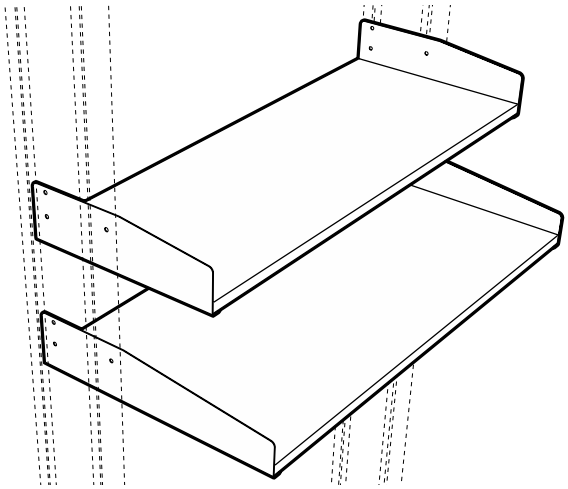

Illustrations and specifications are based on most current design and production information available. Kewaunee reserves the right to make changes at any time without notice.

Double-sided Shelving for 9" Column

Double-sided Undermount Shelves consist of a pair of powder coated, 12 gauge steel shelf brackets and a 1" thick, powder coated, 14 gauge steel shelf. Shelves are infinitely height adjustable from above the worksurface to the top of the column and have limited mounting below the worksurface. The rear edge of the shelf is centered on the workstation column. Single-sided undermount shelves are available with or without retaining lips and may be used on either 9" or 12" column workstations.

Shelf Retaining Lip Options:

00 = No shelf lip
01 = Shelf Lip on one edge
02 = Shelf Lip on both edges

Example: FV59M031236-**01**
= Shelf with Lip on one edge

Double-sided Undermount Shelving

12" Deep		15" Deep	
FV59M031224-__	24"L	**FV59M031524-__**	24"L
FV59M031230-__	30"L	**FV59M031530-__**	30"L
FV59M031236-__	36"L	**FV59M031536-__**	36"L
FV59M031242-__	42"L	**FV59M031542-__**	42"L
FV59M031248-__	48"L	**FV59M031548-__**	48"L
FV59M031254-__	54"L	**FV59M031554-__**	54"L
FV59M031260-__	60"L	**FV59M031560-__**	60"L
FV59M031266-__	66"L	**FV59M031566-__**	66"L
FV59M031272-__	72"L	**FV59M031572-__**	72"L
FV59M031278-__	78"L	**FV59M031578-__**	78"L
FV59M031284-__	84"L	**FV59M031584-__**	84"L
FV59M031290-__	90"L	**FV59M031590-__**	90"L
FV59M031296-__	96"L	**FV59M031596-__**	96"L

FV59 Shelving Assemblies may be used on either 9" or 12" column workstations

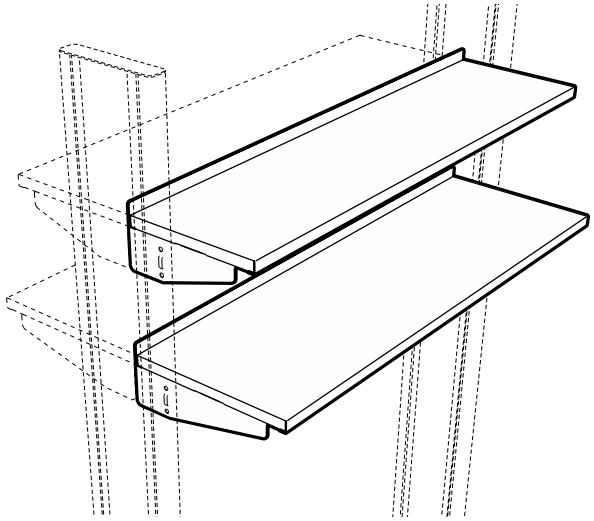

18" Deep	
FV59M031824-__	24"L
FV59M031830-__	30"L
FV59M031836-__	36"L
FV59M031842-__	42"L
FV59M031848-__	48"L
FV59M031854-__	54"L
FV59M031860-__	60"L
FV59M031866-__	66"L
FV59M031872-__	72"L
FV59M031878-__	78"L
FV59M031884-__	84"L
FV59M031890-__	90"L
FV59M031896-__	96"L

FV59 Shelving Assemblies may be used on either 9" or 12" column workstations

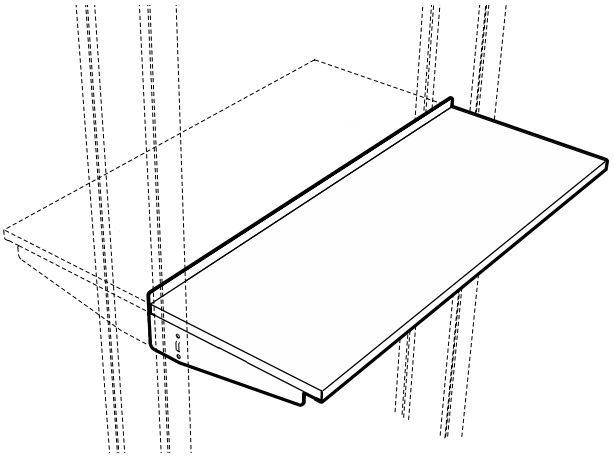

Illustrations and specifications are based on most current design and production information available. Kewaunee reserves the right to make changes at any time without notice.

KEWAUNEE Scientific Corporation

Double-sided Shelving 9" Column

Double-sided Bookend Shelves consist of a pair of powder coated, 5" high, 12 gauge steel shelf brackets and a 1" thick, powder coated, 14 gauge steel shelf. Shelves are infinitely height adjustable from above the worksurface to the top of the column and have limited mounting below worksurface. The rear edge of the shelf is centered on the workstation column. Double-sided bookend shelves are available with or without retaining lips.

Shelf Retaining Lip Options:

00 = No shelf lip
01 = Shelf Lip on one edge
02 = Shelf Lip on both edges

Example: FV64M051536-**00** = Shelf without Retaining Lips

Double-sided Bookend Shelving

12" Deep	
FV64M051224-__	24"L
FV64M051230-__	30"L
FV64M051236-__	36"L
FV64M051242-__	42"L
FV64M051248-__	48"L
FV64M051254-__	54"L
FV64M051260-__	60"L
FV64M051266-__	66"L
FV64M051272-__	72"L
FV64M051278-__	78"L
FV64M051284-__	84"L
FV64M051290-__	90"L
FV64M051296-__	96"L

15" Deep	
FV64M051524-__	24"L
FV64M051530-__	30"L
FV64M051536-__	36"L
FV64M051542-__	42"L
FV64M051548-__	48"L
FV64M051554-__	54"L
FV64M051560-__	60"L
FV64M051566-__	66"L
FV64M051572-__	72"L
FV64M051578-__	78"L
FV64M051584-__	84"L
FV64M051590-__	90"L
FV64M051596-__	96"L

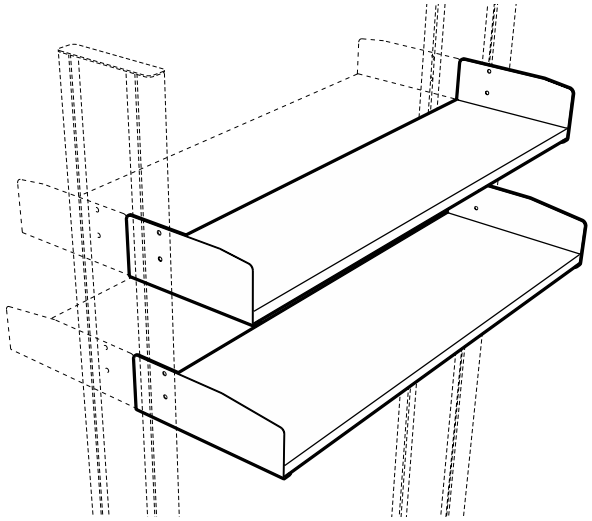

18" Deep	
FV64M051824-__	24"L
FV64M051830-__	30"L
FV64M051836-__	36"L
FV64M051842-__	42"L
FV64M051848-__	48"L
FV64M051854-__	54"L
FV64M051860-__	60"L
FV64M051866-__	66"L
FV64M051872-__	72"L
FV64M051878-__	78"L
FV64M051884-__	84"L
FV64M051890-__	90"L
FV64M051896-__	96"L

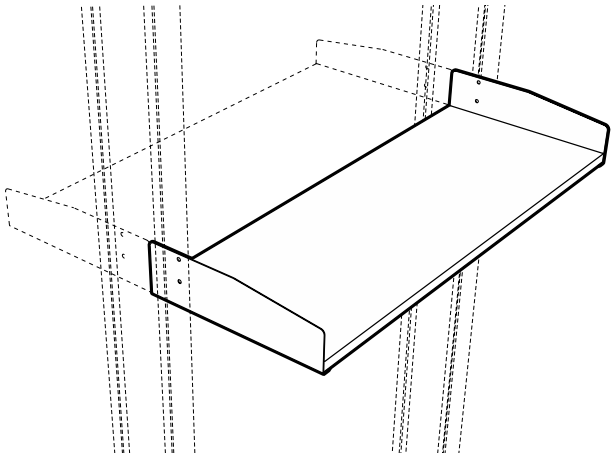

Illustrations and specifications are based on most current design and production information available. Kewaunee reserves the right to make changes at any time without notice.

Center Shelving for 9" Column

Center Undermount Shelves consist of a pair of powder coated, 12 gauge steel shelf brackets and a 1" thick, powder coated, 14 gauge steel shelf. (shelf assemblies over 24" deep are furnished with two shelves) Shelves are infinitely height adjustable from above the worksurface to the top of the column and have limited mounting below worksurface. Shelves are centered on the workstation columns and are available with or without retaining lips.

Shelf Retaining Lip Options:
00 = No shelf lip
*__01__ = Shelf Lip in center
02 = Shelf Lip on both edges
*__03__ = Shelf Lip on both edges and center
* available only on shelves over 24" deep
Example: FV66M021836-**02** = Shelf with Lip on both edges

Center Undermount Shelving

12" Deep

FV66M021224-__	24"L
FV66M021230-__	30"L
FV66M021236-__	36"L
FV66M021242-__	42"L
FV66M021248-__	48"L
FV66M021254-__	54"L
FV66M021260-__	60"L
FV66M021266-__	66"L
FV66M021272-__	72"L
FV66M021278-__	78"L
FV66M021284-__	84"L
FV66M021290-__	90"L
FV66M021296-__	96"L

15" Deep

FV66M021524-__	24"L
FV66M021530-__	30"L
FV66M021536-__	36"L
FV66M021542-__	42"L
FV66M021548-__	48"L
FV66M021554-__	54"L
FV66M021560-__	60"L
FV66M021566-__	66"L
FV66M021572-__	72"L
FV66M021578-__	78"L
FV66M021584-__	84"L
FV66M021590-__	90"L
FV66M021596-__	96"L

18" Deep

FV66M021824-__	24"L
FV66M021830-__	30"L
FV66M021836-__	36"L
FV66M021842-__	42"L
FV66M021848-__	48"L
FV66M021854-__	54"L
FV66M021860-__	60"L
FV66M021866-__	66"L
FV66M021872-__	72"L
FV66M021878-__	78"L
FV66M021884-__	84"L
FV66M021890-__	90"L
FV66M021896-__	96"L

24" Deep

FV66M032424-__	24"L
FV66M032430-__	30"L
FV66M032436-__	36"L
FV66M032442-__	42"L
FV66M032448-__	48"L
FV66M032454-__	54"L
FV66M032460-__	60"L
FV66M032466-__	66"L
FV66M032472-__	72"L
FV66M032478-__	78"L
FV66M032484-__	84"L
FV66M032490-__	90"L
FV66M032496-__	96"L

30" Deep

FV66M033024-__	24"L
FV66M033030-__	30"L
FV66M033036-__	36"L
FV66M033042-__	42"L
FV66M033048-__	48"L
FV66M033054-__	54"L
FV66M033060-__	60"L
FV66M033066-__	66"L
FV66M033072-__	72"L
FV66M033078-__	78"L
FV66M033084-__	84"L
FV66M033090-__	90"L
FV66M033096-__	96"L

36" Deep

FV66M033624-__	24"L
FV66M033630-__	30"L
FV66M033636-__	36"L
FV66M033642-__	42"L
FV66M033648-__	48"L
FV66M033654-__	54"L
FV66M033660-__	60"L
FV66M033666-__	66"L
FV66M033672-__	72"L
FV66M033678-__	78"L
FV66M033684-__	84"L
FV66M033690-__	90"L
FV66M033696-__	96"L

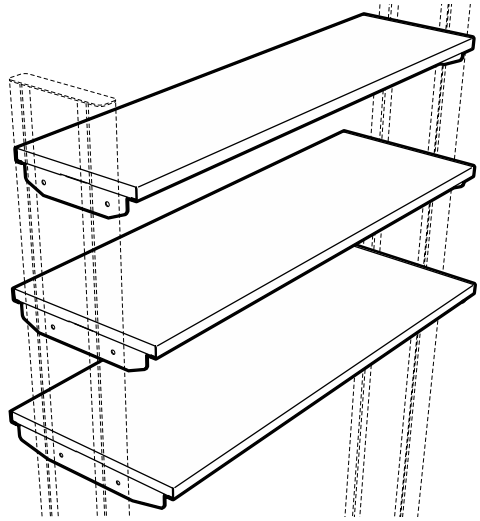

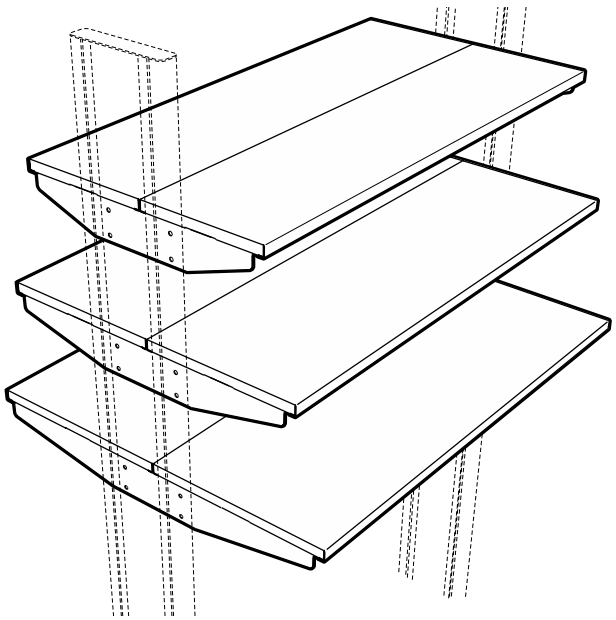

Illustrations and specifications are based on most current design and production information available. Kewaunee reserves the right to make changes at any time without notice.

KEWAUNEE Scientific Corporation

Single-sided Shelving for 12" Column

Single-sided Undermount Shelves consist of a pair of powder coated, 12 gauge steel shelf brackets and a 1" thick, powder coated, 14 gauge steel shelf. Shelves are infinitely height adjustable from above the worksurface to the top of the column and have limited mounting below worksurface. Shelves mount flush with the rear of workstation columns and are available with or without retaining lips.

Shelf Retaining Lip Options:

00 = No shelf lip
01 = Shelf Lip on one edge
02 = Shelf Lip on both edges

Example: FV57M031236-**01** = Shelf with Lip on one edge

Single-sided Undermount Shelving

12" Deep		15" Deep	
FV57M031224-__	24"L	**FV57M031524-__**	24"L
FV57M031230-__	30"L	**FV57M031530-__**	30"L
FV57M031236-__	36"L	**FV57M031536-__**	36"L
FV57M031242-__	42"L	**FV57M031542-__**	42"L
FV57M031248-__	48"L	**FV57M031548-__**	48"L
FV57M031254-__	54"L	**FV57M031554-__**	54"L
FV57M031260-__	60"L	**FV57M031560-__**	60"L
FV57M031266-__	66"L	**FV57M031566-__**	66"L
FV57M031272-__	72"L	**FV57M031572-__**	72"L
FV57M031278-__	78"L	**FV57M031578-__**	78"L
FV57M031284-__	84"L	**FV57M031584-__**	84"L
FV57M031290-__	90"L	**FV57M031590-__**	90"L
FV57M031296-__	96"L	**FV57M031596-__**	96"L

FV57 Shelving Assemblies may be used on either 9" or 12" column workstations

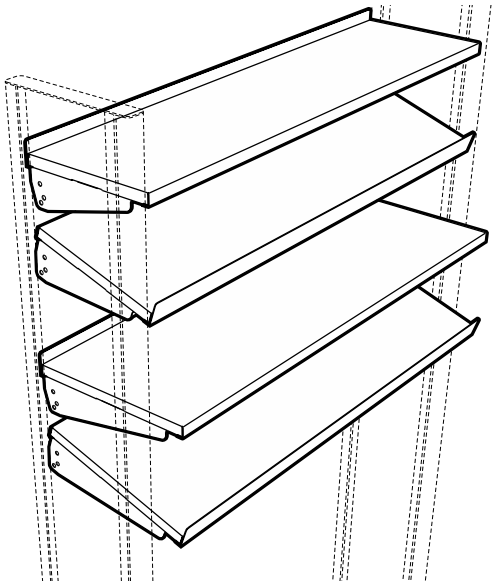

18" Deep		24" Deep	
FV61M031824-__	24"L	**FV61M032424-__**	24"L
FV61M031830-__	30"L	**FV61M032430-__**	30"L
FV61M031836-__	36"L	**FV61M032436-__**	36"L
FV61M031842-__	42"L	**FV61M032442-__**	42"L
FV61M031848-__	48"L	**FV61M032448-__**	48"L
FV61M031854-__	54"L	**FV61M032454-__**	54"L
FV61M031860-__	60"L	**FV61M032460-__**	60"L
FV61M031866-__	66"L	**FV61M032466-__**	66"L
FV61M031872-__	72"L	**FV61M032472-__**	72"L
FV61M031878-__	78"L	**FV61M032478-__**	78"L
FV61M031884-__	84"L	**FV61M032484-__**	84"L
FV61M031890-__	90"L	**FV61M032490-__**	90"L
FV61M031896-__	96"L	**FV61M032496-__**	96"L

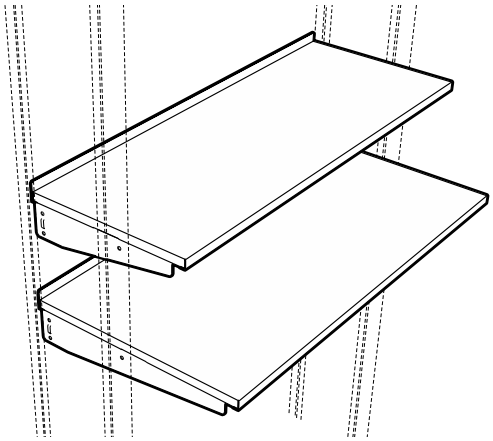

Illustrations and specifications are based on most current design and production information available. Kewaunee reserves the right to make changes at any time without notice.

Single-sided Shelving for 12" Column

Single-sided Bookend Shelves consist of a pair of powder coated, 5" high, 12 gauge steel shelf brackets and a 1" thick, powder coated, 14 gauge steel shelf. Shelves are infinitely height adjustable from above the worksurface to the top of the column and have limited mounting below worksurface. Shelves mount flush with the rear of workstation columns and are available with or without retaining lips.

Shelf Retaining Lip Options:

00 = No shelf lip
01 = Shelf Lip on one edge
02 = Shelf Lip on both edges

Example: FV58M051536-**00** = Shelf without Retaining Lips

Single-sided Bookend Shelving

12" Deep		15" Deep	
FV58M051224-__	24"L	**FV58M051524-__**	24"L
FV58M051230-__	30"L	**FV58M051530-__**	30"L
FV58M051236-__	36"L	**FV58M051536-__**	36"L
FV58M051242-__	42"L	**FV58M051542-__**	42"L
FV58M051248-__	48"L	**FV58M051548-__**	48"L
FV58M051254-__	54"L	**FV58M051554-__**	54"L
FV58M051260-__	60"L	**FV58M051560-__**	60"L
FV58M051266-__	66"L	**FV58M051566-__**	66"L
FV58M051272-__	72"L	**FV58M051572-__**	72"L
FV58M051278-__	78"L	**FV58M051578-__**	78"L
FV58M051284-__	84"L	**FV58M051584-__**	84"L
FV58M051290-__	90"L	**FV58M051590-__**	90"L
FV58M051296-__	96"L	**FV58M051596-__**	96"L

FV58 Shelving Assemblies may be used on either 9" or 12" column workstations

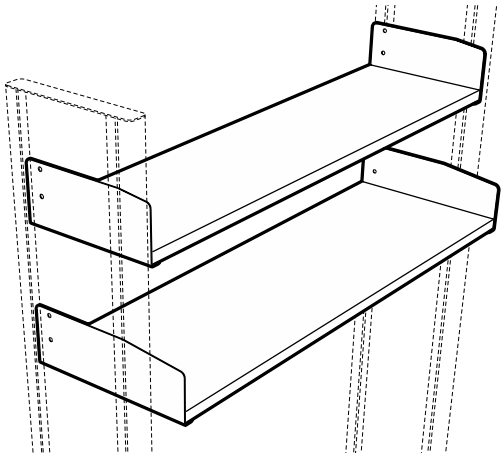

18" Deep		24" Deep	
FV63M051824-__	24"L	**FV63M052424-__**	24"L
FV63M051830-__	30"L	**FV63M052430-__**	30"L
FV63M051836-__	36"L	**FV63M052436-__**	36"L
FV63M051842-__	42"L	**FV63M052442-__**	42"L
FV63M051848-__	48"L	**FV63M052448-__**	48"L
FV63M051854-__	54"L	**FV63M052454-__**	54"L
FV63M051860-__	60"L	**FV63M052460-__**	60"L
FV63M051866-__	66"L	**FV63M052466-__**	66"L
FV63M051872-__	72"L	**FV63M052472-__**	72"L
FV63M051878-__	78"L	**FV63M052478-__**	78"L
FV63M051884-__	84"L	**FV63M052484-__**	84"L
FV63M051890-__	90"L	**FV63M052490-__**	90"L
FV63M051896-__	96"L	**FV63M052496-__**	96"L

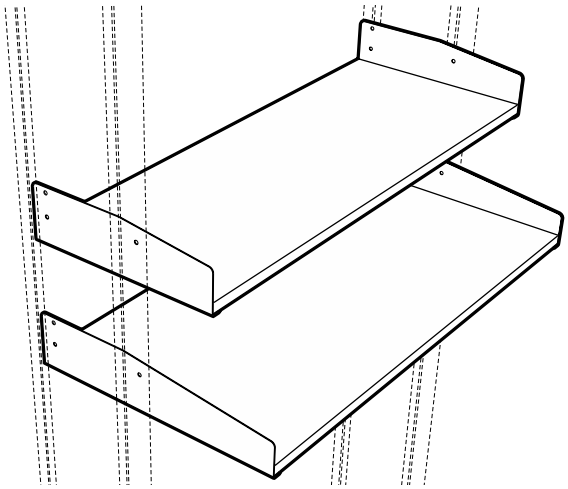

Illustrations and specifications are based on most current design and production information available. Kewaunee reserves the right to make changes at any time without notice.

KEWAUNEE Scientific Corporation

Double-sided Shelving for 12" Column

Double-sided Undermount Shelves consist of a pair of powder coated, 12 gauge steel shelf brackets and a 1" thick, powder coated, 14 gauge steel shelf. Shelves are infinitely height adjustable from above the worksurface to the top of the column and have limited mounting below the worksurface. The rear edge of the shelf is centered on the workstation column. Double-sided undermount shelves are available with or without retaining lips and may be used on either 9" or 12" column workstations.

Shelf Retaining Lip Options:

00 = No shelf lip
01 = Shelf Lip on one edge
02 = Shelf Lip on both edges

Example: FV59M031236-**01** = Shelf with Lip on one edge

Double-sided Under-mount Shelving

12" Deep		15" Deep	
FV59M031224-__	24"L	**FV59M031524-__**	24"L
FV59M031230-__	30"L	**FV59M031530-__**	30"L
FV59M031236-__	36"L	**FV59M031536-__**	36"L
FV59M031242-__	42"L	**FV59M031542-__**	42"L
FV59M031248-__	48"L	**FV59M031548-__**	48"L
FV59M031254-__	54"L	**FV59M031554-__**	54"L
FV59M031260-__	60"L	**FV59M031560-__**	60"L
FV59M031266-__	66"L	**FV59M031566-__**	66"L
FV59M031272-__	72"L	**FV59M031572-__**	72"L
FV59M031278-__	78"L	**FV59M031578-__**	78"L
FV59M031284-__	84"L	**FV59M031584-__**	84"L
FV59M031290-__	90"L	**FV59M031590-__**	90"L
FV59M031296-__	96"L	**FV59M031596-__**	96"L

FV59 Shelving Assemblies may be used on either 9" or 12" column workstations

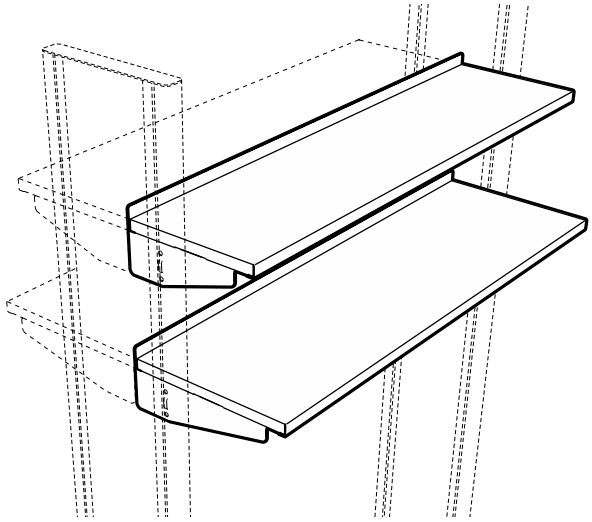

18" Deep	
FV59M031824-__	24"L
FV59M031830-__	30"L
FV59M031836-__	36"L
FV59M031842-__	42"L
FV59M031848-__	48"L
FV59M031854-__	54"L
FV59M031860-__	60"L
FV59M031866-__	66"L
FV59M031872-__	72"L
FV59M031878-__	78"L
FV59M031884-__	84"L
FV59M031890-__	90"L
FV59M031896-__	96"L

FV59 Shelving Assemblies may be used on either 9" or 12" column workstations

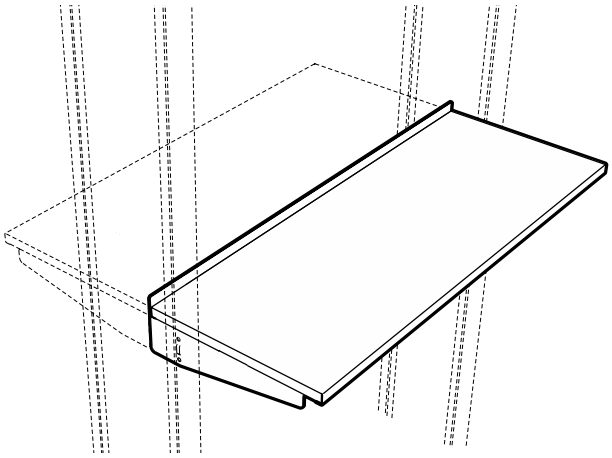

Illustrations and specifications are based on most current design and production information available. Kewaunee reserves the right to make changes at any time without notice.

Double-sided Shelving 12" Column

Double-sided Bookend Shelves consist of a pair of powder coated, 5" high, 12 gauge steel shelf brackets and a 1" thick, powder coated, 14 gauge steel shelf. Shelves are infinitely height adjustable from above the worksurface to the top of the column and have limited mounting below worksurface. The rear edge of the shelf is centered on the workstation column. Double-sided bookend shelves are available with or without retaining lips.

Shelf Retaining Lip Options:
00 = No shelf lip
01 = Shelf Lip on one edge
02 = Shelf Lip on both edges

Example: FV65M051536-**00** = Shelf without Retaining Lips

Double-sided Bookend Shelving

12" Deep

FV65M051224-__	24"L
FV65M051230-__	30"L
FV65M051236-__	36"L
FV65M051242-__	42"L
FV65M051248-__	48"L
FV65M051254-__	54"L
FV65M051260-__	60"L
FV65M051266-__	66"L
FV65M051272-__	72"L
FV65M051278-__	78"L
FV65M051284-__	84"L
FV65M051290-__	90"L
FV65M051296-__	96"L

15" Deep

FV65M051524-__	24"L
FV65M051530-__	30"L
FV65M051536-__	36"L
FV65M051542-__	42"L
FV65M051548-__	48"L
FV65M051554-__	54"L
FV65M051560-__	60"L
FV65M051566-__	66"L
FV65M051572-__	72"L
FV65M051578-__	78"L
FV65M051584-__	84"L
FV65M051590-__	90"L
FV65M051596-__	96"L

18" Deep

FV65M051824-__	24"L
FV65M051830-__	30"L
FV65M051836-__	36"L
FV65M051842-__	42"L
FV65M051848-__	48"L
FV65M051854-__	54"L
FV65M051860-__	60"L
FV65M051866-__	66"L
FV65M051872-__	72"L
FV65M051878-__	78"L
FV65M051884-__	84"L
FV65M051890-__	90"L
FV65M051896-__	96"L

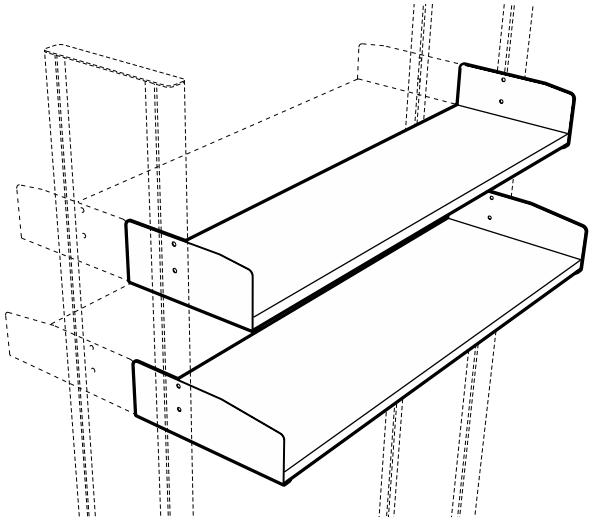

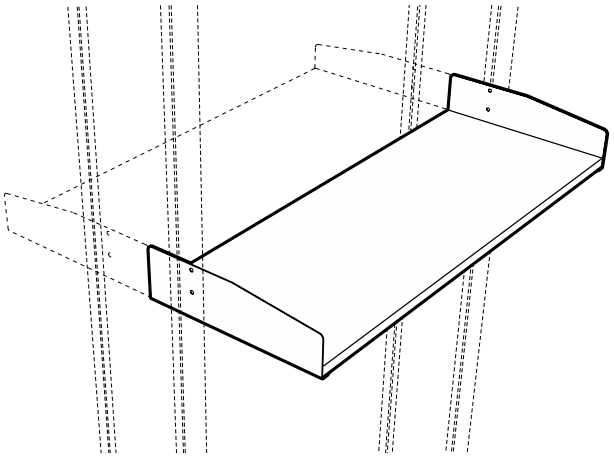

Illustrations and specifications are based on most current design and production information available. Kewaunee reserves the right to make changes at any time without notice.

KEWAUNEE Scientific Corporation

Center Shelving for 12" Column

Center Undermount Shelves consist of a pair of powder coated, 12 gauge steel shelf brackets and a 1" thick, powder coated, 14 gauge steel shelf. (shelf assemblies over 24" deep are furnished with two shelves) Shelves are infinitely height adjustable from above the worksurface to the top of the column and have limited mounting below worksurface. Shelves are centered on the workstation columns and are available with or without retaining lips.

Shelf Retaining Lip Options:
00 = No shelf lip
*__01__ = Shelf Lip in center
02 = Shelf Lip on both edges
*__03__ = Shelf Lip on both edges and center
* available only on shelves over 24" deep
Example: FV67M021836-**02** = Shelf with Lip on both edges

Center Undermount Shelving

12" Deep

FV67M021224-__	24"L
FV67M021230-__	30"L
FV67M021236-__	36"L
FV67M021242-__	42"L
FV67M021248-__	48"L
FV67M021254-__	54"L
FV67M021260-__	60"L
FV67M021266-__	66"L
FV67M021272-__	72"L
FV67M021278-__	78"L
FV67M021284-__	84"L
FV67M021290-__	90"L
FV67M021296-__	96"L

15" Deep

FV67M021524-__	24"L
FV67M021530-__	30"L
FV67M021536-__	36"L
FV67M021542-__	42"L
FV67M021548-__	48"L
FV67M021554-__	54"L
FV67M021560-__	60"L
FV67M021566-__	66"L
FV67M021572-__	72"L
FV67M021578-__	78"L
FV67M021584-__	84"L
FV67M021590-__	90"L
FV67M021596-__	96"L

18" Deep

FV67M021824-__	24"L
FV67M021830-__	30"L
FV67M021836-__	36"L
FV67M021842-__	42"L
FV67M021848-__	48"L
FV67M021854-__	54"L
FV67M021860-__	60"L
FV67M021866-__	66"L
FV67M021872-__	72"L
FV67M021878-__	78"L
FV67M021884-__	84"L
FV67M021890-__	90"L
FV67M021896-__	96"L

24" Deep

FV67M032424-__	24"L
FV67M032430-__	30"L
FV67M032436-__	36"L
FV67M032442-__	42"L
FV67M032448-__	48"L
FV67M032454-__	54"L
FV67M032460-__	60"L
FV67M032466-__	66"L
FV67M032472-__	72"L
FV67M032478-__	78"L
FV67M032484-__	84"L
FV67M032490-__	90"L
FV67M032496-__	96"L

30" Deep

FV67M033024-__	24"L
FV67M033030-__	30"L
FV67M033036-__	36"L
FV67M033042-__	42"L
FV67M033048-__	48"L
FV67M033054-__	54"L
FV67M033060-__	60"L
FV67M033066-__	66"L
FV67M033072-__	72"L
FV67M033078-__	78"L
FV67M033084-__	84"L
FV67M033090-__	90"L
FV67M033096-__	96"L

36" Deep

FV67M033624-__	24"L
FV67M033630-__	30"L
FV67M033636-__	36"L
FV67M033642-__	42"L
FV67M033648-__	48"L
FV67M033654-__	54"L
FV67M033660-__	60"L
FV67M033666-__	66"L
FV67M033672-__	72"L
FV67M033678-__	78"L
FV67M033684-__	84"L
FV67M033690-__	90"L
FV67M033696-__	96"L

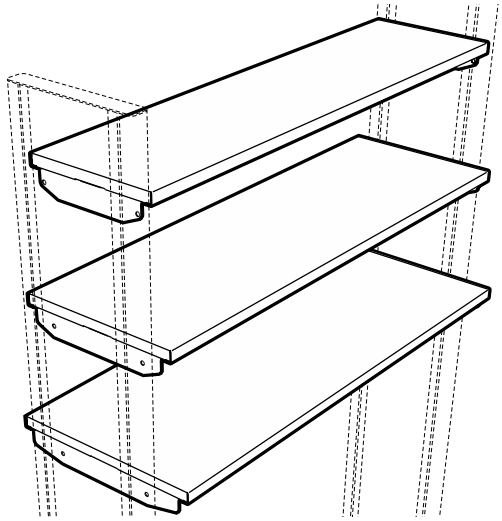

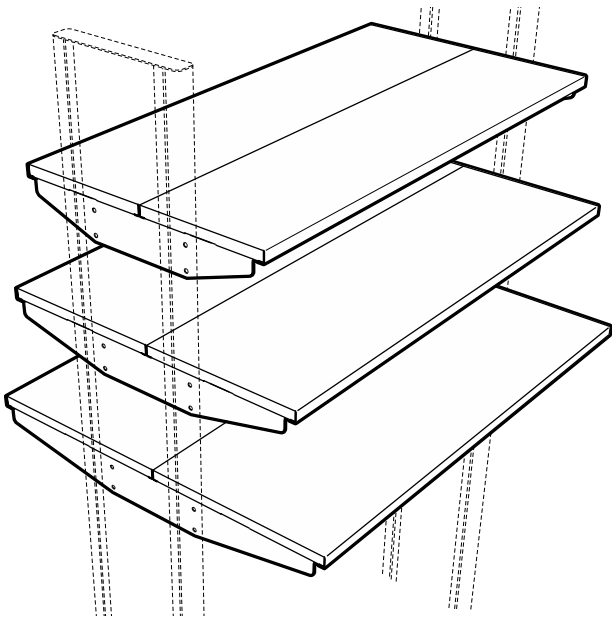

Illustrations and specifications are based on most current design and production information available. Kewaunee reserves the right to make changes at any time without notice.

Shelf Brackets

Shelf Brackets may be ordered separately for use with custom shelving materials.

Single-sided Undermount and Bookend Shelf Brackets are powder coated, 12 gauge steel, and are designed to allow the shelf to mount flush with the rear of workstation columns. Brackets are furnished with nuts and bolts for mounting to the workstation column but do not include shelf fasteners.

Single-sided Undermount Shelf Brackets

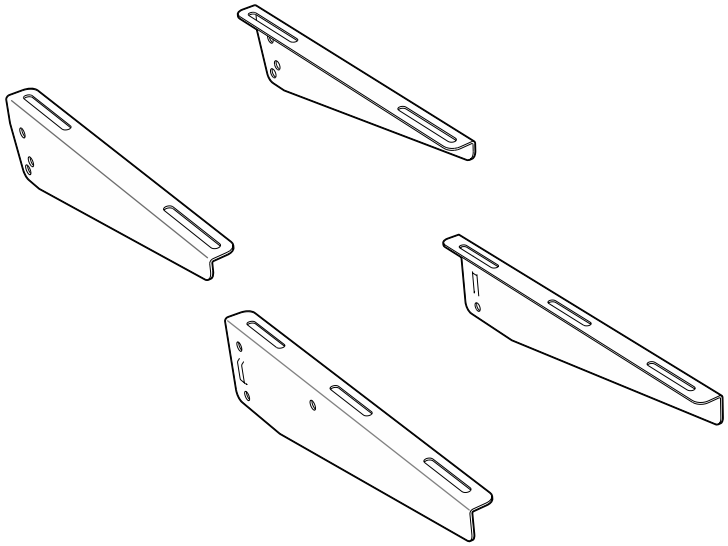

Universal – for 9" or 12" Column

FV57M0312PR-00	12" Deep	pair
FV57M0315PR-00	15" Deep	pair

FV57 Shelf Brackets may be used on either 9" or 12" column workstations

For 9” Column

FV60M0318PR-00	18" Deep	pair
FV60M0324PR-00	24" Deep	pair

For 12” Column

FV61M0318PR-00	18" Deep	pair
FV61M0324PR-00	24" Deep	pair

Single-sided Bookend Shelf Brackets

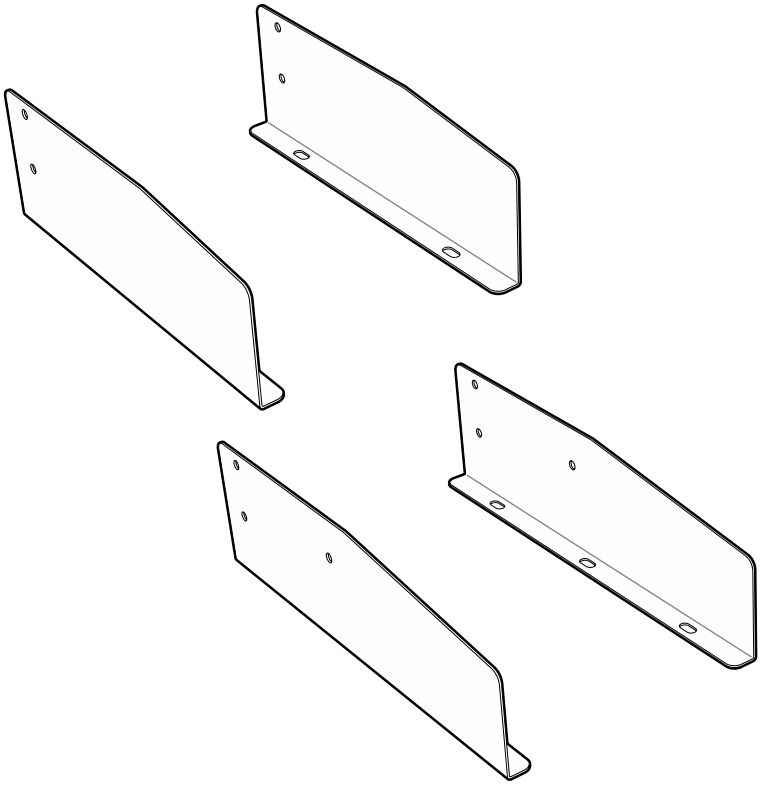

Universal – for 9” or 12” Column

FV58M0512PR-00	12" Deep	pair
FV58M0515PR-00	15" Deep	pair

FV58 Shelf Brackets may be used on either 9" or 12" column workstations

For 9” Column

FV62M0518PR-00	18" Deep	pair
FV62M0524PR-00	24" Deep	pair

For 12” Column

FV63M0518PR-00	18" Deep	pair
FV63M0524PR-00	24" Deep	pair

Illustrations and specifications are based on most current design and production information available. Kewaunee reserves the right to make changes at any time without notice.

KEWAUNEE Scientific Corporation

Shelf Brackets

Shelf Brackets may be ordered separately for use with custom shelving materials.

Double-sided Undermount and Bookend Shelf Brackets are powder coated, 12 gauge steel, and are designed to allow the shelf rear edge to mount to the center of the workstation columns. Brackets are furnished with nuts and bolts for mounting to the workstation column but do not include shelf fasteners.

Center Undermount Shelf Brackets are powder coated, 12 gauge steel, and are designed to allow the shelf to mount to the center of the workstation columns. Brackets are furnished with nuts and bolts for mounting to the workstation column but do not include shelf fasteners.

Double-sided Undermount Shelf Brackets

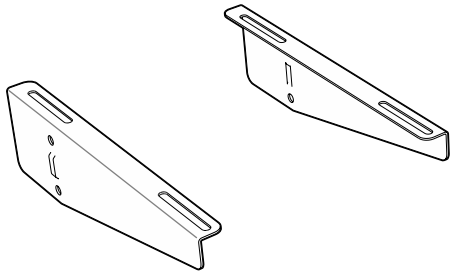

Universal – for 9” or 12” Column

FV59M0312PR-00	12" Deep	pair
FV59M0315PR-00	15" Deep	pair
FV59M0318PR-00	18" Deep	pair

FV59 Shelf Brackets may be used on either 9" or 12" column workstations

Double-sided Bookend Shelf Brackets

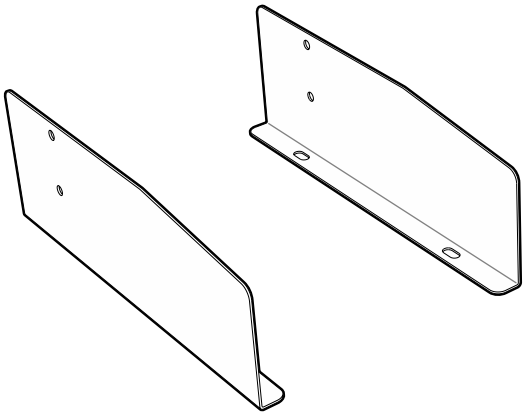

For 9” Column

FV64M0512PR-00	12" Deep	pair
FV64M0515PR-00	15" Deep	pair
FV64M0518PR-00	18" Deep	pair

For 12” Column

FV65M0512PR-00	12" Deep	pair
FV65M0515PR-00	15" Deep	pair
FV65M0518PR-00	18" Deep	pair

Center Undermount Shelf Brackets

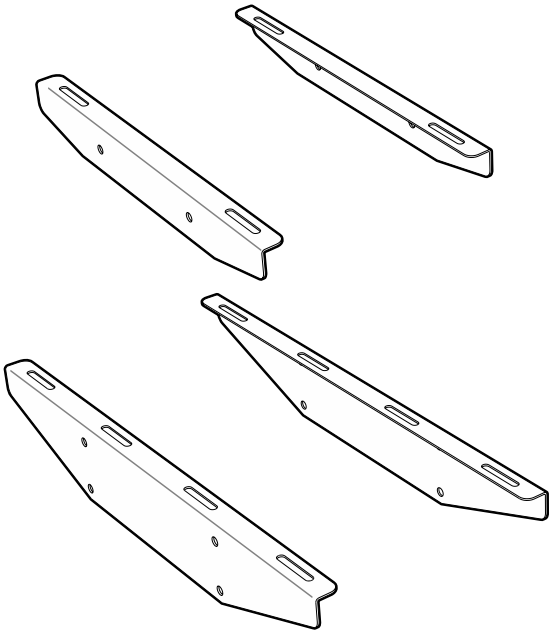

For 9” Column

FV66M0212PR-00	12" Deep	pair
FV66M0215PR-00	15" Deep	pair
FV66M0218PR-00	18" Deep	pair
FV66M0324PR-00	24” Deep	pair
FV66M0330PR-00	30” Deep	pair
FV66M0336PR-00	36” Deep	pair

For 12” Column

FV67M0212PR-00	12" Deep	pair
FV67M0215PR-00	15" Deep	pair
FV67M0218PR-00	18" Deep	pair
FV67M0324PR-00	24” Deep	pair
FV67M0330PR-00	30” Deep	pair
FV67M0336PR-00	36” Deep	pair

Illustrations and specifications are based on most current design and production information available. Kewaunee reserves the right to make changes at any time without notice.

Mobile Floor Shelving

Mobile Floor Shelves are designed for heavy duty storage at the floor level. Fabricated from powder coated, 16 gauge cold rolled steel, they are mounted on four fixed directional casters for straight tracking, and a radius front edge with recessed handle(s).

Mobile Floor Shelving

21" Deep

FV79M042124-00	24"L
FV79M042130-00	30"L
FV79M042136-00	36"L
FV79M042142-00	42"L
FV79M042148-00	48"L
FV79M042154-00	54"L
FV79M042160-00	60"L
FV79M042166-00	66"L
FV79M042172-00	72"L
FV79M042178-00	78"L
FV79M042184-00	84"L
FV79M042190-00	90"L
FV79M042196-00	96"L

27" Deep

FV79M042724-00	24"L
FV79M042730-00	30"L
FV79M042736-00	36"L
FV79M042742-00	42"L
FV79M042748-00	48"L
FV79M042754-00	54"L
FV79M042760-00	60"L
FV79M042766-00	66"L
FV79M042772-00	72"L
FV79M042778-00	78"L
FV79M042784-00	84"L
FV79M042790-00	90"L
FV79M042796-00	96"L

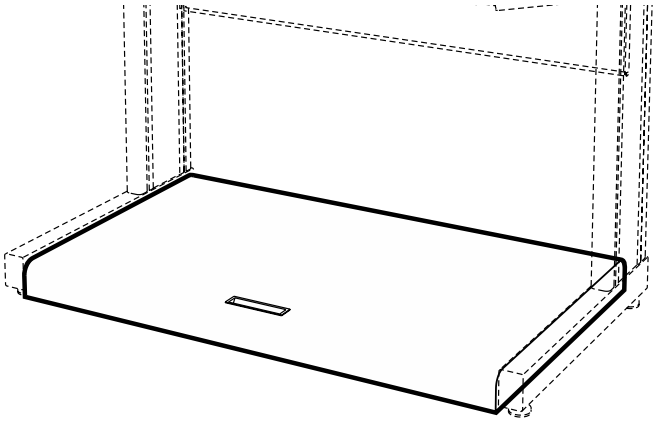

33" Deep

FV79M043324-00	24"L
FV79M043330-00	30"L
FV79M043336-00	36"L
FV79M043342-00	42"L
FV79M043348-00	48"L
FV79M043354-00	54"L
FV79M043360-00	60"L
FV79M043366-00	66"L
FV79M043372-00	72"L
FV79M043378-00	78"L
FV79M043384-00	84"L
FV79M043390-00	90"L
FV79M043396-00	96"L

Illustrations and specifications are based on most current design and production information available. Kewaunee reserves the right to make changes at any time without notice.

Lighting

Fluorescent Task Lighting consists of a thin-profile, specification grade, white, painted steel housing, 1" high by 3½" deep. It is UL listed and furnished with rocker switch, single outlet, lamp, and six foot cord.

LED Task Lighting consists of a thin-profile, white, LED strip, 9.5mm high by 33mm deep with a touch dimmer switch. It is UL listed and furnished with 120 VAC to 24 VDC power supply with ten foot power cord. The light includes a magnetic mounting strip for mounting to steel shelving and integral tabs for mounting to wood and plastic laminate.

Fluorescent Task Lighting

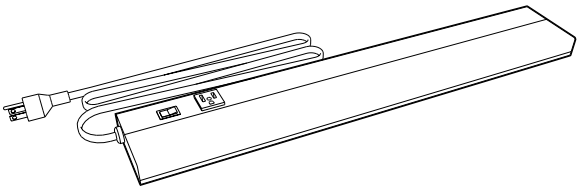

Part Number	Nominal Length	Actual Length	Fits Under
F-5314-00	24”	21¼”	29" - 35" Shelves
F-5316-00	36”	34⅜”	40" - 47" Shelves

LED Task Lighting

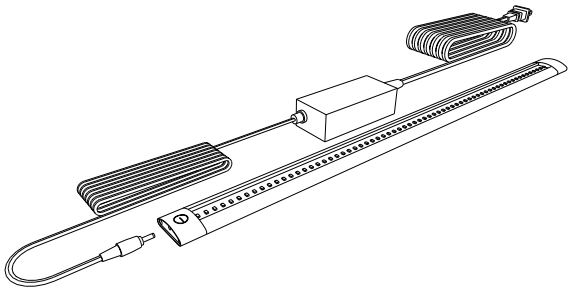

Part Number	Length	Fits Under
X-030002-00	500mm – 19⅝"	29" - 40" Shelves
X-030003-00	1000mm – 39⅜"	46" - 47" Shelves

Illustrations and specifications are based on most current design and production information available. Kewaunee reserves the right to make changes at any time without notice.

Lighting

Fluorescent Overhead Lighting mounts between the columns and includes two support arms, that allows adjustment of height, tilt, and distance from column. The powder coated steel light assembly includes: T8 fluorescent tube, On/Off switch, 24" long jumper cord, and 10 foot power cord. The light includes an easily removed diffuser for tube replacement and all required mounting hardware. Field installation of jumper or power cord is required.

LED Overhead Lighting mounts between the columns and includes two support arms that allows adustment of height, tilt, and distance from column. The powder coated steel light assembly includes: LED light, On/Off switch, 24" long jumper cord, and 10 foot power cord. The light includes an easily removed diffuser and all required mounting hardware. Field installation of jumper or power cord is required.

Overhead Lighting

16 1/2" Long Support Arm

Fluoresent Light		LED Light	
FV52M031624-00	24"L	**FV53M031624-00**	24"L
FV52M031630-00	30"L	**FV53M031630-00**	30"L
FV52M031636-00	36"L	**FV53M031636-00**	36"L
FV52M031642-00	42"L	**FV53M031642-00**	42"L
FV52M031648-00	48"L	**FV53M031648-00**	48"L
FV52M031654-00	54"L	**FV53M031654-00**	54"L
FV52M031660-00	60"L	**FV53M031660-00**	60"L
FV52M031666-00	66"L	**FV53M031666-00**	66"L
FV52M031672-00	72"L	**FV53M031672-00**	72"L
FV52M031678-00	78"L	**FV53M031678-00**	78"L
FV52M031684-00	84"L	**FV53M031684-00**	84"L
FV52M031690-00	90"L	**FV53M031690-00**	90"L
FV52M031696-00	96"L	**FV53M031696-00**	96"L

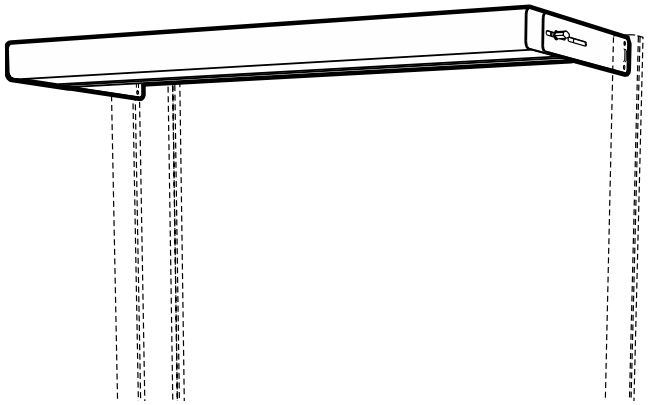

22 1/2" Long Support Arm

Fluoresent Light		LED Light	
FV52M032224-00	24"L	**FV53M032224-00**	24"L
FV52M032230-00	30"L	**FV53M032230-00**	30"L
FV52M032236-00	36"L	**FV53M032236-00**	36"L
FV52M032242-00	42"L	**FV53M032242-00**	42"L
FV52M032248-00	48"L	**FV53M032248-00**	48"L
FV52M032254-00	54"L	**FV53M032254-00**	54"L
FV52M032260-00	60"L	**FV53M032260-00**	60"L
FV52M032266-00	66"L	**FV53M032266-00**	66"L
FV52M032272-00	72"L	**FV53M032272-00**	72"L
FV52M032278-00	78"L	**FV53M032278-00**	78"L
FV52M032284-00	84"L	**FV53M032284-00**	84"L
FV52M032290-00	90"L	**FV53M032290-00**	90"L
FV52M032296-00	96"L	**FV53M032296-00**	96"L

Illustrations and specifications are based on most current design and production information available. Kewaunee reserves the right to make changes at any time without notice.

Accessories

Power Bars are available with either 15 or 20 amp receptacles, include an On/Off switch with built in circuit breaker, and a 10 foot power cord with either a straight blade or twist-lock plug. They are column mounted and infinitely height adjustable from the worksurface to the top of the column with limited mounting ability below worksurface. Power bars are fabricated from powder coated, cold rolled steel, include all mounting hardware, and are UL Listed.

Power Cord Plug Option:

1 = Straight Blade (NEMA 5-15/5-20)
2 = Twist-lock (NEMA L5-15/L5-20)

Example: FV50M030336-12
Power Bar with 15 amp Twist-lock plug

Power Bar

15 Amp		Number of Duplex Receptacles
FV50M030224-1_	24"L	2
FV50M030230-1_	30"L	2
FV50M030236-1_	36"L	4
FV50M030242-1_	42"L	4
FV50M030248-1_	48"L	4
FV50M030254-1_	54"L	4
FV50M030260-1_	60"L	4
FV50M030266-1_	66"L	4
FV50M030272-1_	72"L	4
FV50M030278-1_	78"L	4
FV50M030284-1_	84"L	4
FV50M030290-1_	90"L	4
FV50M030296-1_	96"L	4

20 Amp		Number of Duplex Receptacles
FV50M030224-2_	24"L	2
FV50M030230-2_	30"L	2
FV50M030236-2_	36"L	4
FV50M030242-2_	42"L	4
FV50M030248-2_	48"L	4
FV50M030254-2_	54"L	4
FV50M030260-2_	60"L	4
FV50M030266-2_	66"L	4
FV50M030272-2_	72"L	4
FV50M030278-2_	78"L	4
FV50M030284-2_	84"L	4
FV50M030290-2_	90"L	4
FV50M030296-2_	96"L	4

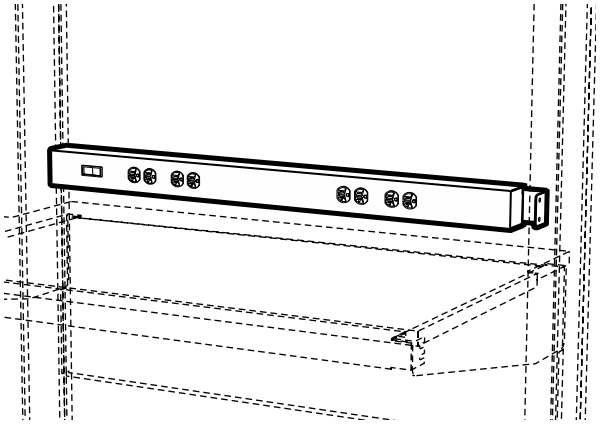

Illustrations and specifications are based on most current design and production information available. Kewaunee reserves the right to make changes at any time without notice.

Accessories

Fabric Covered Tack Panels include a powder coated steel support frame, a fabric covered panel, and mounting hardware. Tack panels are column mounted and infinitely height adjustable from above the worksurface to the top of the column. When used in conjunction with shelving, tack panel must be mounted above the shelf or below the shelf brackets.

Contact your your local Kewaunee sales representative for available colors.

Fabric Covered Tack Panels

12" High

FV73M120224-00	24"L
FV73M120230-00	30"L
FV73M120236-00	36"L
FV73M120242-00	42"L
FV73M120248-00	48"L
FV73M120254-00	54"L
FV73M120260-00	60"L
FV73M120266-00	66"L
FV73M120272-00	72"L
FV73M120278-00	78"L
FV73M120284-00	84"L
FV73M120290-00	90"L
FV73M120296-00	96"L

18" High

FV73M180224-00	24"L
FV73M180230-00	30"L
FV73M180236-00	36"L
FV73M180242-00	42"L
FV73M180248-00	48"L
FV73M180254-00	54"L
FV73M180260-00	60"L
FV73M180266-00	66"L
FV73M180272-00	72"L
FV73M180278-00	78"L
FV73M180284-00	84"L
FV73M180290-00	90"L
FV73M180296-00	96"L

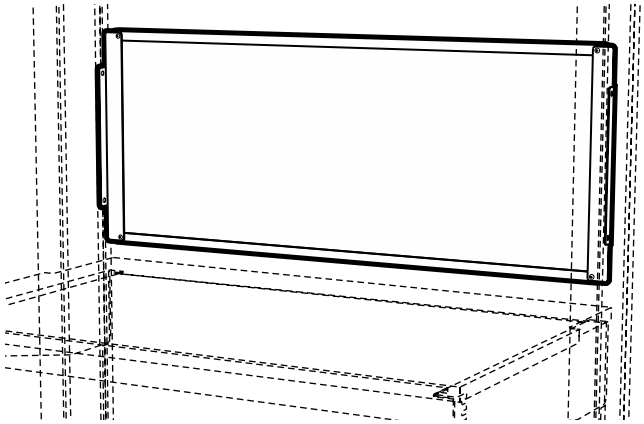

24" High

FV73M240224-00	24"L
FV73M240230-00	30"L
FV73M240236-00	36"L
FV73M240242-00	42"L
FV73M240248-00	48"L
FV73M240254-00	54"L
FV73M240260-00	60"L
FV73M240266-00	66"L
FV73M240272-00	72"L
FV73M240278-00	78"L
FV73M240284-00	84"L
FV73M240290-00	90"L
FV73M240296-00	96"L

Illustrations and specifications are based on most current design and production information available. Kewaunee reserves the right to make changes at any time without notice.

Accessories

Bin Bars are 12 gauge steel with a channel formation for added rigidity. Column mounted, infinitely height adjustable from above the worksurface to the top of the column, bin bar mounting brackets incorporate three depth adjustment slots. Bin Bars are available in either powder coated steel, or stainless steel. Stainless Steel Bin Bars are designed for ESD applications and include a grounding kit. Both include required mounting hardware.

Bin Bars

Powder Coated Steel Bin Bar w/Brackets	
FV70M020224-00	24"L
FV70M020230-00	30"L
FV70M020236-00	36"L
FV70M020242-00	42"L
FV70M020248-00	48"L
FV70M020254-00	54"L
FV70M020260-00	60"L
FV70M020266-00	66"L
FV70M020272-00	72"L
FV70M020278-00	78"L
FV70M020284-00	84"L
FV70M020290-00	90"L
FV70M020296-00	96"L

Stainless Steel Bin Bar w/Brackets	
FV70S020224-00	24"L
FV70S020230-00	30"L
FV70S020236-00	36"L
FV70S020242-00	42"L
FV70S020248-00	48"L
FV70S020254-00	54"L
FV70S020260-00	60"L
FV70S020266-00	66"L
FV70S020272-00	72"L
FV70S020278-00	78"L
FV70S020284-00	84"L
FV70S020290-00	90"L
FV70S020296-00	96"L

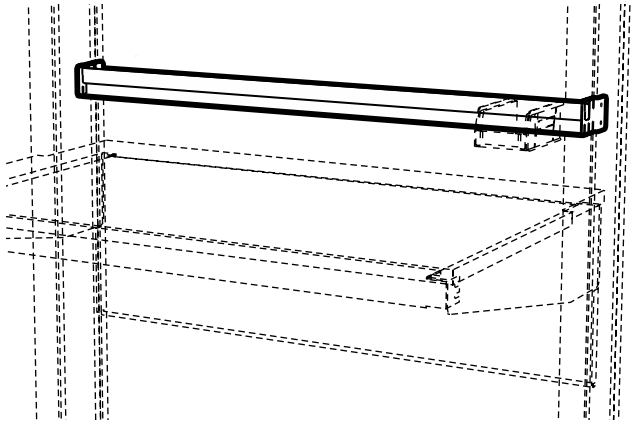

Illustrations and specifications are based on most current design and production information available. Kewaunee reserves the right to make changes at any time without notice.

Accessories

Top of Column Horizontal Chases are designed to mount flush with the top of the column and can accommodate wiring, conduit, and piping. They provide a convenient chase for stand-alone benches or a continuous chase through the columns for interconnected applications. Made of powder coated steel, they include a removable top cover and all required mounting hardware.

Top of Column Horizontal Chase

4" High – 8" Deep		4" High – 11" Deep	
FV72M040824-00	24"L	**FV72M041124-00**	24"L
FV72M040830-00	30"L	**FV72M041130-00**	30"L
FV72M040836-00	36"L	**FV72M041136-00**	36"L
FV72M040842-00	42"L	**FV72M041142-00**	42"L
FV72M040848-00	48"L	**FV72M041148-00**	48"L
FV72M040854-00	54"L	**FV72M041154-00**	54"L
FV72M040860-00	60"L	**FV72M041160-00**	60"L
FV72M040866-00	66"L	**FV72M041166-00**	66"L
FV72M040872-00	72"L	**FV72M041172-00**	72"L
FV72M040878-00	78"L	**FV72M041178-00**	78"L
FV72M040884-00	84"L	**FV72M041184-00**	84"L
FV72M040890-00	90"L	**FV72M041190-00**	90"L
FV72M040896-00	96"L	**FV72M041196-00**	96"L

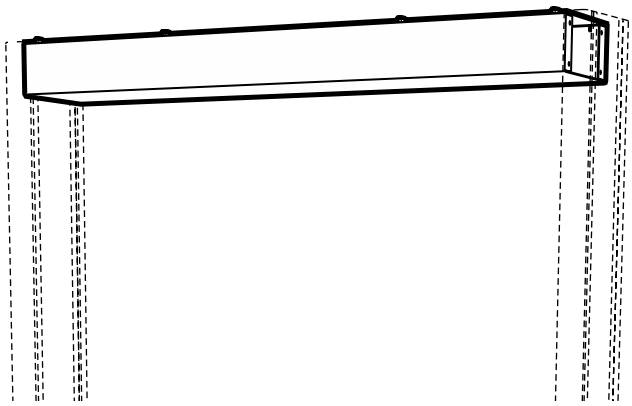

Illustrations and specifications are based on most current design and production information available. Kewaunee reserves the right to make changes at any time without notice.

KEWAUNEE Scientific Corporation

Service Fittings & Fixtures

Features:

Service Fittings

- May be mounted on columns with powder coated steel accent strips only
- Vertical columns accept up to three fittings
- Fittings pre-plumbed to hoses for connection to overhead service panels and chases
- Keyed quick-connect fittings to ease service connection and disconnection during bench relocation

Electrical and Data Fixtures

- May be mounted on columns with powder coated steel accent strips only
- May be pre-wired to top or bottom of column
- All cataloged components UL listed
- Columns are certificed to UL standard 61010-1 when pre-wired with cataloged fixtures

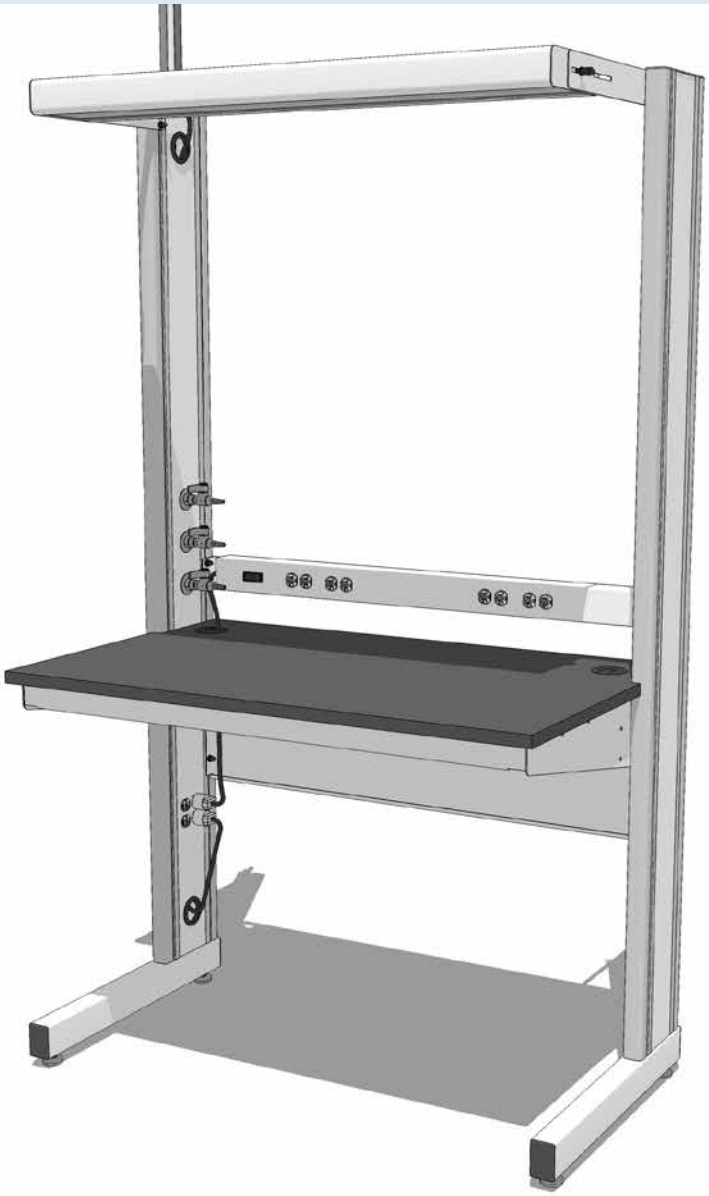

Illustrations and specifications are based on most current design and production information available. Kewaunee reserves the right to make changes at any time without notice.

Service Fittings

Internal Service Hoses are required to mount services on the workstation columns. They are factory installed when ordered with the service fitting and are available in either reinforced PVC or braided stainless steel. The ⅜" hoses are furnished with a ⅜" IPS female outlet and either a ⅜" IPS female inlet or ⅜" IPS male quick-connect inlet.

Hoses are available in multiple lengths from 3 feet to 8 feet above the top of an 84" column and in 9 colors to match quick-connect color codes.

Specify hose color by placing color code at end of hose part number.
Example: W-6132E36-**02** for Orange hose with female inlet

Specify hose color and quick-connect key by placing color code and key number at end of hose part number.
Example: W-6135E36-**01**-**K4** for Black hose with Yellow Vacuum quick-connect

Service fittings require columns with steel accent strips.

Internal Service Hoses

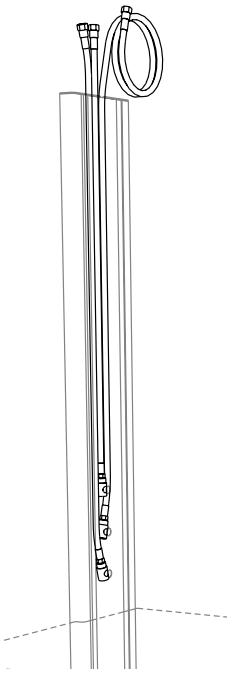

Reinforced PVC Hose
for Non-burning Gases
3/8" IPS Female Inlet – 3/8" IPS Female Outlet

Part Number	Length (Above Top Of Column)
W-6132E36-0_	36" ATOC
W-6132E48-0_	48" ATOC
W-6132E60-0_	60" ATOC
W-6132E72-0_	72" ATOC
W-6132E96-0_	96" ATOC

Reinforced PVC Hose with Quick-connect Fitting
for Non-burning Gases
3/8" IPS Male Quick-connect Inlet (not illustrated)
3/8" IPS Female Outlet

Part Number	Length (Above Top Of Column)
W-6135E36-0_-K_	36" ATOC
W-6135E48-0_-K_	48" ATOC
W-6135E60-0_-K_	60" ATOC
W-6135E72-0_-K_	72" ATOC
W-6135E96-0_-K_	96" ATOC

Braided Stainless Steel Hose
for Natural & Reactive Gases
3/8" IPS Female Inlet – 3/8" IPS Female Outlet

Part Number	Length (Above Top Of Column)
W-6232E36-00	36" ATOC
W-6232E48-00	48" ATOC
W-6232E60-00	60" ATOC
W-6232E72-00	72" ATOC
W-6232E96-00	96" ATOC

Braided Stainless Steel Hose with Quick-connect Fitting
for Natural & Reactive Gases
3/8" IPS Male Quick-connect Inlet (not illustrated)
3/8" IPS Female Outlet

Part Number	Length (Above Top Of Column)
W-6235E36-K_	36" ATOC
W-6235E48-K_	48" ATOC
W-6235E60-K_	60" ATOC
W-6235E72-K_	72" ATOC
W-6235E96-K_	96" ATOC

Keyed Quick-connect Fittings

Male Quick-connect
3/8" IPS Male

Part Number	Key Color
W-8111-K1	Black
W-8111-K2	Orange
W-8111-K3	Green
W-8111-K4	Yellow
W-8111-K5	Blue
W-8111-K6	White
W-8111-K7	Purple
W-8111-K8	Brown

Keyed Quick-connect Fittings

Key Number and Color Code	Standard Service	Female Body Sleeve Dia.		Male Body Sleeve Dia.	
		in.	mm	in	mm
K1 Black	Helium	1.13	28.7	0.99	25.1
K2 Orange	Air	1.16	29.5	1.02	25.8
K3 Green	Water	1.19	30.2	1.05	26.6
K4 Yellow	Vacuum	1.22	31.0	1.08	27.4
K5 Blue	Gas	1.24	31.5	1.11	28.1
K6 White	—	1.28	32.5	1.14	28.9
K7 Purple	Argon	1.31	33.3	1.17	29.7
K8 Brown	Nitrogen	1.34	34.0	1.20	30.4

Hose Colors

Color Code	Color
01	Black
02	Orange
03	Green
04	Yellow
05	Blue
06	White
07	Purple
08	Brown
09	Clear

Illustrations and specifications are based on most current design and production information available. Kewaunee reserves the right to make changes at any time without notice.

KEWAUNEE Scientific Corporation

Service Fittings

Ball Valves are chrome plated brass and provide on/off control of gas, air, or vacuum at pressures up to 75 PSI.

Needle Point Cocks are chrome plated brass with a brass floating cone and integral brass seat. They provide metering control of laboratory gases at pressures up to 60 PSI.

Service fittings require columns with steel accent strips.

Service Fittings

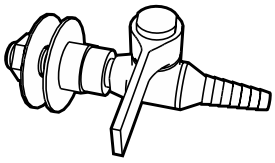

Ball Valve

3/8" IPS Male Inlet

Part Number	Service
W-0605-0A	Air
W-0605-0G	Gas
W-0605-0N	Nitrogen
W-0605-0R	Argon
W-0605-0V	Vacuum
W-0605-00	Specify

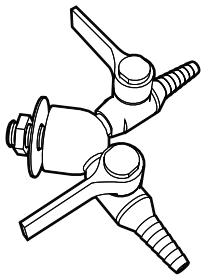

Double Ball Valve

3/8" IPS Female Inlet

Part Number	Service
W-0602-0A	Air
W-0602-0G	Gas
W-0602-0N	Nitrogen
W-0602-0R	Argon
W-0602-0V	Vacuum
W-0602-00	Specify

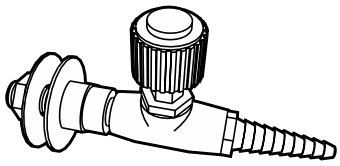

Needle Point Cock

3/8" IPS Male Inlet

Part Number	Service
W-0606-0A	Air
W-0606-0G	Gas
W-0606-0N	Nitrogen
W-0606-0R	Argon
W-0606-0V	Vacuum
W-0606-00	Specify

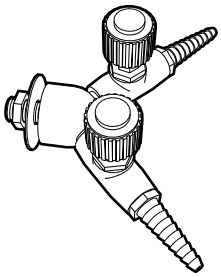

Double Needle Point Cock

3/8" IPS Female Inlet

Part Number	Service
W-0603-0A	Air
W-0603-0G	Gas
W-0603-0N	Nitrogen
W-0603-0R	Argon
W-0603-0V	Vacuum
W-0603-00	Specify

Illustrations and specifications are based on most current design and production information available. Kewaunee reserves the right to make changes at any time without notice.

Electric/Data Fixtures & Accessories

Electrical Fixtures may be mounted in the workstation columns as either a single device, or double device configuration. Part numbers shown include the device, the required cutout and hardware, and installation. Electrical devices include pre-wiring when a power cord is specified. Location of devices must be specified.

RJ45—8P8C Data/Com Outlets are available in either Cat-6 or Cat-6a configurations. Part numbers shown include the device, the required cutout and hardware, and installation. They do not include wiring.

Electric/Data Fixtures require columns with steel accent strips.

Electrical/Data Fixtures

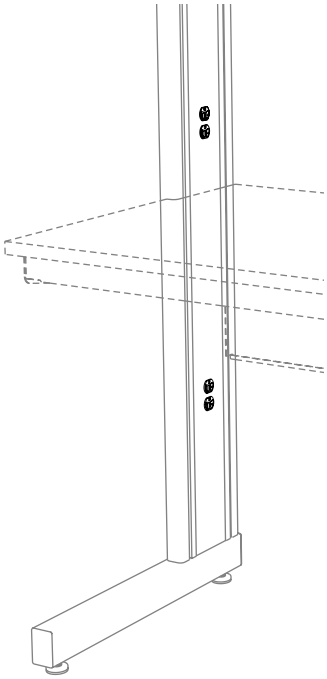

RJ45 8P8C Data/Com Outlet

Part Number	Color	Category
FV-D620-1K-6	Black	Cat-6
FV-D620-1V-6	Ivory	Cat-6
FV-D620-1W-6	White	Cat-6
FV-D620-1K-6a	Black	Cat-6a
FV-D620-1V-6a	Ivory	Cat-6a
FV-D620-1W-6a	White	Cat-6a

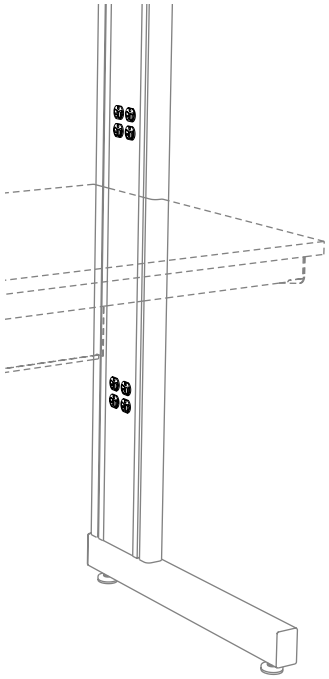

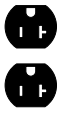

120 VAC, 20 amp specification grade, 3-wire polarized grounding duplex receptacle

Single Duplex

Part Number	Device
FV-S581-1K	Black
FV-S581-1V	Ivory
FV-S581-1W	White
FV-S581-1G	Grey
FV-S581-1R	Red

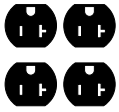

Double Duplex

Part Number	Color
FV-S581-6K	Black
FV-S581-6V	Ivory
FV-S581-6W	White
FV-S581-6G	Grey
FV-S581-6R	Red

120 VAC, 20 amp specification grade, 3-wire polarized grounding duplex receptacle

Single Duplex

Part Number	Device
FV-S681-1K	Black
FV-S681-1V	Ivory
FV-S681-1W	White
FV-S681-1G	Grey
FV-S681-1R	Red

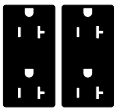

Double Duplex

Part Number	Color
FV-S681-6K	Black
FV-S681-6V	Ivory
FV-S681-6W	White
FV-S681-6G	Grey
FV-S681-6R	Red

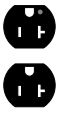

120 VAC, 20 amp hospital grade, 3-wire polarized grounding duplex receptacle

Hospital Grade Single Duplex

Part Number	Device
FV-H581-1K	Black
FV-H581-1V	Ivory
FV-H581-1W	White
FV-H581-1G	Grey
FV-H581-1R	Red

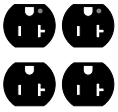

Hospital Grade Double Duplex

Part Number	Color
FV-H581-6K	Black
FV-H581-6V	Ivory
FV-H581-6W	White
FV-H581-6G	Grey
FV-H581-6R	Red

120 VAC, 20 amp, GFCI, specification grade duplex receptacle

GFCI Single Duplex

Part Number	Device
FV-S656-1K	Black
FV-S656-1V	Ivory
FV-S656-1W	White
FV-S656-1G	Grey
FV-S656-1R	Red

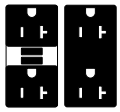

GFCI Double Duplex

Part Number	Color
FV-S658-6K	Black
FV-S658-6V	Ivory
FV-S658-6W	White
FV-S658-6G	Grey
FV-S658-6R	Red

Illustrations and specifications are based on most current design and production information available. Kewaunee reserves the right to make changes at any time without notice.

Electric/Data Fixtures & Accessories

Power Cords are required to carry power from the electrical devices to wall outlets or overhead service panels. The SJ 12/3 and SJ 12/4 cords are available in multiple lengths measured from the top of 84" high columns. Standard exit point is the top of the column, but they may be routed to the bottom when specified.

Cord Access Ports are designed to route power and data cords from the interior of the column through the column accent strip, but may be used as pass-thru ports when workstations are set in a continuous run. Ports are a 2 1/2" diameter hole fitted with a rubber grommet creating a 2 1/8" diameter access. Location of ports must be specified.

Power Cords

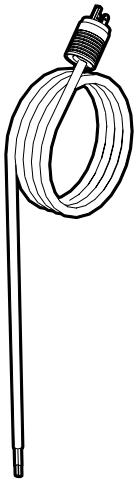

Single-circuit 3-wire

120 VAC — 20A — NEMA 5-20

Part Number	Length	Plug Type
W-5621-36	36"ATOC	Straight Blade
W-5621-48	48"ATOC	Straight Blade
W-5621-60	60"ATOC	Straight Blade
W-5621-72	72"ATOC	Straight Blade
W-5621-96	96"ATOC	Straight Blade

120 VAC — 20A — NEMA L5-20

Part Number	Length	Plug Type
W-5622-36	36"ATOC	Twist-Lock
W-5622-48	48"ATOC	Twist-Lock
W-5622-60	60"ATOC	Twist-Lock
W-5622-72	72"ATOC	Twist-Lock
W-5622-96	96"ATOC	Twist-Lock

Dual-circuit 4-wire

120 VAC — 20A — NEMA L14-20

Part Number	Length	Plug Type
W-5624-36	36"ATOC	Twist-Lock
W-5624-48	48"ATOC	Twist-Lock
W-5624-60	60"ATOC	Twist-Lock
W-5624-72	72"ATOC	Twist-Lock
W-5624-96	96"ATOC	Twist-Lock

Cord Access Ports

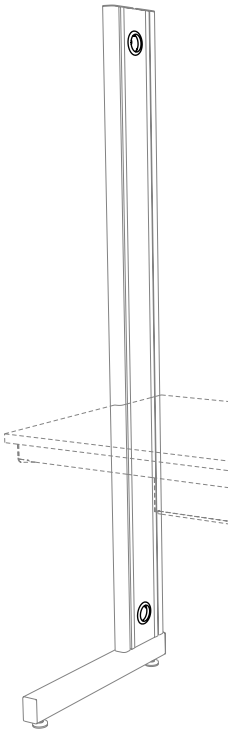

Part Number

F-8421-00

Illustrations and specifications are based on most current design and production information available. Kewaunee reserves the right to make changes at any time without notice.

Steel & Wood Cabinets

Features:

Steel Base Cabinets

- Electrostatically applied, chemical resistant, powder coat finish available in colors to compliment any laboratory environment
- Heavy gauge formed and welded steel cabinet body construction provides strength and durability
- One piece drawer body, radiused all four sides
- Furnished standard with full-extension, soft-close drawer slides
- One-piece case bottom and horizontal front rail
- Furnished standard with finished back
- Exclusive positive door catch option
- Five-knuckle, semi-concealed, and concealed hinges available

Wood Base Cabinets

- Multiple coat, chemical resistant finish system formulated to highlight the natural grain patterns
- Dovetailed drawer construction with nine-ply hardwood plywood drawer sides
- 3/4" seven-ply hardwood plywood end panels, bottom and shelf, with solid hardwood facing
- Full extention, ball bearing, 100 lb. load rated, drawer slides, standard on all drawers and pullboards.
- 3/4" seven-ply hardwood plywood finished back dadoed into end panels and bottom
- Institutional type five-knuckle offset door hinges rated for 150 pound loads

Illustrations and specifications are based on most current design and production information available. Kewaunee reserves the right to make changes at any time without notice.

KEWAUNEE Scientific Corporation

Cabinet Door & Drawer Styles

Steel Inset — Square Edge

- Doors and drawer heads are flush with face of cabinet
- Square Edge
- Multiple Pull and Hinge Options

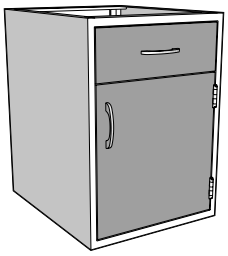

with Type 1 Pull

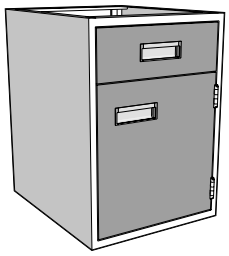

with Type 9 Pull

Steel Overlay — Square Edge

- Square Edge Full Overlay Construction
- Multiple Pull and Hinge Options

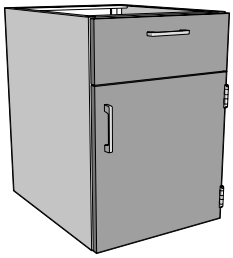

with Type 8 Pull

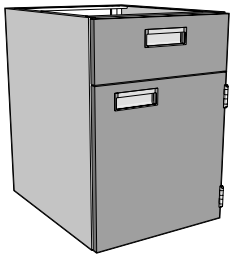

with Type 9 Pull

Steel Overlay — Bevel Edge

- Beveled Edge Full Overlay Construction
- Multiple Pull and Hinge Options

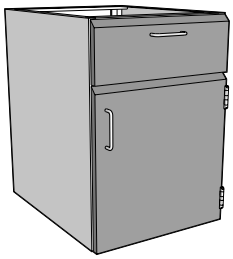

with Type 4 Pull

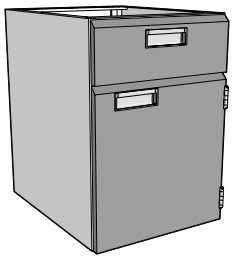

with Type 9 Pull

Steel Overlay — Wood on Steel

- Oak or Maple Door and Drawer Front
- Multiple Pull and Hinge Options

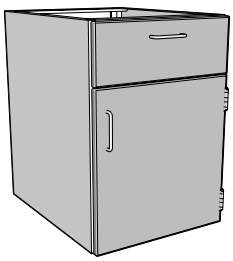

Wood Style-1

Conventional

- Radius Lip, Semi-Overlay Construction
- Multiple Pull Options

Wood Style-3

Silhouette

- Radius Edge, Semi-Overlay Construction
- Integral Machined Pull

Wood Style-5

Contemporary

- Square Edge, Full Overlay Construction
- Multiple Pull Options

Illustrations and specifications are based on most current design and production information available. Kewaunee reserves the right to make changes at any time without notice.

Steel and Wood Cabinet Part Numbers

Base Cabinet Catalog Number Explanation

M 25 C 33 22 18 - 10 11

Cabinet Type
B = Open Cupboard Cabinet
C = All Cupboard Cabinet
D = All Drawer Cabinet
E = Drawer & Cupboard Cabinet
G = Special Purpose Cabinet
M = Mobile Cabinet

Drawer and Door Configuration

Cabinetry Material
W = Wood
C = Steel

Cabinet Height
19 = 19 3/8" **20** = 19 5/8" **25** = 25 1/8" **26** = 25 15/16"
26 = 26 1/4" **27** = 26 3/4" **33** = 33"

Cabinet Depth
(Nominal in Inches)

Cabinet Length
(Nominal in Inches)

Special Configurations
L = Left Hand Swing

Style-Hardware Material Selection
See Below

Steel Furniture Style – Hardware – Material Selections

M25C332218-0101

Cabinet Style – Hinge Type – Catch
0 = Inset – 5-knuckle Hinge – Positive Catch
1 = Full Overlay – 5-knuckle Hinge – Positive Catch
4 = Full Overlay – Semi-concealed Hinge
6 = Full Overlay – Concealed Hinge (170° Swing)

Door and Drawer Style
1 = Square Edge Steel
6 = Wood – Available for Full Overlay Cabinet Styles only
7 = Beveled Edge Steel – Available for Full Overlay Cabinet Styles only

Cabinet Material / D&D Material
0 = Cold Rolled Steel / Cold Rolled Steel
1 = Cold Rolled Steel / Plain Sliced Red Oak
2 = Cold Rolled Steel / Plain Sliced White Maple
*__3__ = Stainless Steel / Stainless Steel
* Stainless Steel available in D&D Style 1 only

Pull Type
0 = No Option
1 = Rounded Aluminum
2 = Black Wire
3 = White Wire
4 = Stainless Steel Wire
6 = Chrome Plated Wire
‡**7** = Beveled Label Holder
8 = Square Aluminum
†**9** = Flush Aluminum
‡ Mounts horizontally
† Not available on wood doors & drawer heads

Wood Furniture Style – Hardware – Material Selections

M25W332218-1011

Door and Drawer Head Style
0 = No Option
1 = Conventional Radius Lip
3 = Silhouette
5 = Contemporary Full Overlay

Hinge Type
0 = Stainless Steel – Five Knuckle
2 = Black Powder Coated – Five Knuckle
3 = White Powder Coated – Five Knuckle

Cabinet Exterior
1 = Plain Sliced Red Oak
†**2** = Plain Sliced White Maple †
† Maple exterior available for Style 1 and Style 5 only

Pull Type
*__0__ = No Pull
1 = Rounded Aluminum
2 = Black Wire
3 = White Wire
4 = Stainless Steel Wire
5 = Integral Machined
6 = Chrome Plated Wire
‡**7** = Beveled Label Holder
8 = Square Aluminum
‡ Mounts horizontally
* pull holes bored on 4" centers but no pull provided

Illustrations and specifications are based on most current design and production information available. Kewaunee reserves the right to make changes at any time without notice.

Base Cabinet Information

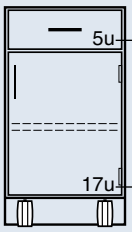

Base cabinets are designed on a "unit" system to allow maximum flexibility in the selection of drawer and/or cupboard door sizes. The charts below show both the actual height as well as the "unit" height of both Steel and Wood Base Cabinets

The adjacent tables indicate the "unit" height, actual height and inside clearance dimensions of the base cabinets drawers and cupboards. Simply match the "unit" code shown on the cabinet to the appropriate code in the tables.

Steel Cabinet Dimensions		
Descriptive Height	**Dimensional Height**	**Unit Height**
Standing Mobile	33"	54 units
Sitting Mobile	26 1/4"	42 units
25" High Suspended	25 1/8"	48 units
19" High Suspended	19 3/8"	36 units

Wood Cabinet Dimensions		
Descriptive Height	**Dimensional Height**	**Unit Height**
Standing Mobile	33"	22 units
Sitting Mobile	26 3/4"	17 units
25" High Suspended	25 15/16"	20 units
19" High Suspended	19 5/8"	15 units

Steel Drawer Size Codes

Units High	Drawer Head Height	Inside Dimensions	
		Clear/ Height	Length (Front-to-Back)
8	3 3/4"	2 3/8"	18"
9	4 1/4"	2 3/8"	18"
10	4 3/4"	3 7/16"	18"
11	5 3/16"	3 15/16"	18"
12	5 11/16"	4 7/16"	18"
14	6 5/8"	5 3/8"	18"
15	6 1/8"	5 7/8"	18"
16	7 5/8"	6 3/8"	18"
20	9 9/16"	8 5/16"	18"
24	11 1/2"	10 1/4"	18"
3	1 3/16"	Pullout Shelf	

Wood Drawer Size Codes

Units High	Drawer Head Height	Inside Dimensions	
		Clear/ Height	Length (Front-to-Back)
2	Pullboard		14"
3	2 13/16"	2 1/8" †	16 3/4"
4	4 1/16"	3 3/8" †	16 3/4"
5	5 5/16"	4 5/8" †	16 3/4"
6	6 9/16"	5 7/8" †	16 3/4"
7	7 13/16"	7 1/8" †	16 3/4"
8	9 1/8"	8 3/8" †	16 3/4"
10	11 5/8"	10 7/8" †	16 3/4"
12	14 1/8"	13 1/8" †	16 3/4"

† 1/4" less if drawer is top drawer in cabinet

Steel Drawer Width I.D. (side-to-side)

Base Cabinet Length	Number of Drawers Across		
	1	2	3
12"	8 3/8"		
15"	11 3/8"		
18"	14 3/8"		
21"	17 3/8"		
24"	20 3/8"	8 3/8"	
30"	26 3/8"	11 3/8"	
36"	32 3/8"	14 3/8"	8 3/8"
42"	38 3/8"	17 3/8"	
48"	44 3/8"	20 3/8"	12 3/8"

Wood Drawer Width I.D. (side-to-side)

Base Cabinet Length	Number of Drawers Across		
	1	2	3
15"	11 1/2"		
18"	14 1/2"		
21"	17 1/2"		
24"	20 1/2"	8 3/4"	
30"	26 1/2"	11 3/4"	
36"	32 1/2"	14 3/4"	8 3/4"
42"	38 1/2"	17 3/4"	11 3/4"
48"	44 1/2"	20 3/4"	14 3/4"

Steel Cupboard Size Codes

Units High	Door Height	Inside Dimensions	
		Height (Top-to-Bottom)	Depth (Front-to-Back)
30	14 9/16"	13 9/16"	20 1/2"
36	17 7/16"	16 7/16"	20 1/2"
45	21 13/16"	20 13/16"	20 1/2"
48	23 3/16"	22 3/16"	20 1/2"
54	26 1/16"	25 1/16"	20 1/2"
60	29"	28"	20 1/2"

Wood Cupboard Size Codes

Units High	Opening Height	Inside Dimensions	
		Height (Top-to-Bottom)	Depth (Front-to-Back)
12	14 3/8"	14 3/8"	19 1/2"
15	18 1/8"	18 1/8"	19 1/2"
16	19 3/8"	19 3/8"	19 1/2"
17	20 5/8"	20 5/8"	19 1/2"
18	21 7/8"	21 7/8"	19 1/2"
20	24 1/4"	24 1/4"	19 1/2"
22	26 3/4"	26 3/4"	19 1/2"
24	29 1/4"	29 1/4"	19 1/2"

Steel Cupboard Width I.D. (side-to-side)

Base Cabinet Length	Number of Cupboards Across		
	1	2	3
12"	9 1/2"		
15"	12 1/2"		
18"	15 1/2"		
21"	18 1/2"		
24"	21 1/2"	9 1/2"	
30"	27 1/2"	12 1/2"	
36"	33 1/2"	15 1/2"	9 1/2"
42"	39 1/2"	18 1/2"	
48"	45 1/2"	21 1/2"	13 1/2"

Wood Cupboard Width I.D. (side-to-side)

Base Cabinet Length	Number of Cupboards Across		
	1	2	3
15"	13 1/2"		
18"	16 1/2"		
21"	19 1/2"		
24"	22 1/2"	10 3/4"	
30"	28 1/2"	13 3/4"	
36"	34 1/2"	16 3/4"	10 3/4"
42"	40 1/2"	19 3/4"	12 3/4"
48"	46 1/2"	22 3/4"	14 3/4"

The dimensions shown in these tables are minimums. They may be slightly larger on some cabinet types and/or styles .

Illustrations and specifications are based on most current design and production information available. Kewaunee reserves the right to make changes at any time without notice.

Wood Sitting Height Mobile Cabinets

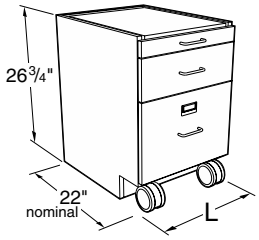

Specifications:

These Mobile Cabinets are 26¾" high and a nominal 22" deep. Lengths as shown. They are designed to fit under 30" high worksurface frames.

Drawer cabinets are furnished with counter weights, multiple-drawer cabinets include an interlock system. All mobile cabinets have finished backs.

Note: Last four digits of part number designates door and drawer head style, hinge, hardwood species, and pull selection. See page 48 for full explanation. Actual product may vary slightly from catalog illustration due to style and hardware selection.

Cupboard Cabinets

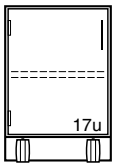

M10W272215L____ 15"L
M10W272218L____ 18"L
M10W272221L____ 21"L
M10W272224L____ 24"L

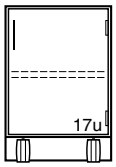

M10W272215-____ 15"L
M10W272218-____ 18"L
M10W272221-____ 21"L
M10W272224-____ 24"L

Cupboard Cabinets with Pullboards

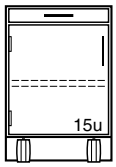

M15W272215L____ 15"L
M15W272218L____ 18"L
M15W272221L____ 21"L
M15W272224L____ 24"L

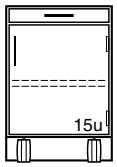

M15W272215-____ 15"L
M15W272218-____ 18"L
M15W272221-____ 21"L
M15W272224-____ 24"L

Drawer/Cupboard Cabinets

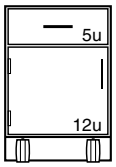

M20W272215L____ 15"L
M20W272218L____ 18"L
M20W272221L____ 21"L
M20W272224L____ 24"L

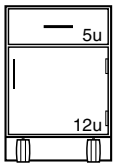

M20W272215-____ 15"L
M20W272218-____ 18"L
M20W272221-____ 21"L
M20W272224-____ 24"L

Drawer/Cupboard Cabinets with Pullboards

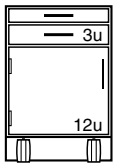

M25W272215L____ 15"L
M25W272218L____ 18"L
M25W272221L____ 21"L
M25W272224L____ 24"L

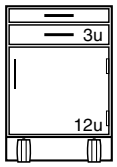

M25W272215-____ 15"L
M25W272218-____ 18"L
M25W272221-____ 21"L
M25W272224-____ 24"L

Drawer Cabinets

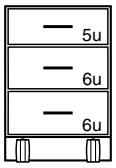

M30W272215-____ 15"L
M30W272218-____ 18"L
M30W272221-____ 21"L
M30W272224-____ 24"L

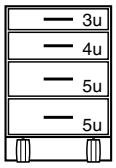

M40W272215-____ 15"L
M40W272218-____ 18"L
M40W272221-____ 21"L
M40W272224-____ 24"L

Drawer Cabinets with Pullboards

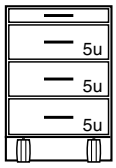

M35W272215-____ 15"L
M35W272218-____ 18"L
M35W272221-____ 21"L
M35W272224-____ 24"L

Note: Wood Mobile Cabinets are constructed with finished top panels. Tops may be added but are not required to close the top of the cabinet.

Tops are recommended on wood mobile cabinets with pullboards.

Tops must be ordered separately. *(see page 55)*

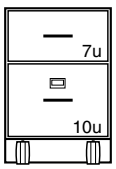

M60W272215-____ 15"L
M60W272218-____ 18"L
M60W272221-____ 21"L
M60W272224-____ 24"L

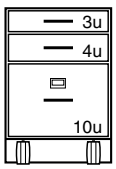

M62W272215-____ 15"L
M62W272218-____ 18"L
M62W272221-____ 21"L
M62W272224-____ 24"L

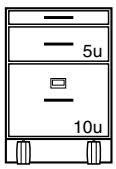

M65W272215-____ 15"L
M65W272218-____ 18"L
M65W272221-____ 21"L
M65W272224-____ 24"L

Illustrations and specifications are based on most current design and production information available. Kewaunee reserves the right to make changes at any time without notice.

KEWAUNEE Scientific Corporation

Wood Standing Height Mobile Cabinets

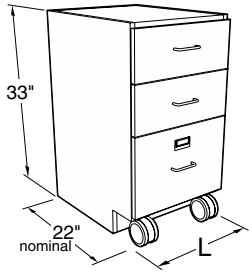

Specifications:

These Mobile Cabinets are 33" high and a nominal 22" deep. Lengths as shown. They are designed to fit under 36" high worksurface frames.

Drawer cabinets are furnished with counter weights, multiple-drawer cabinets include an interlock system. All mobile cabinets have finished backs.

Note: Last four digits of part number designates door and drawer head style, hinge, hardwood species, and pull selection. See page 48 for full explanation. Actual product may vary slightly from catalog illustration due to style and hardware selection.

Cupboard Cabinets

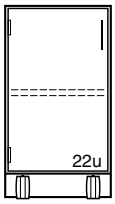

M10W332215L____ 15"L
M10W332218L____ 18"L
M10W332221L____ 21"L
M10W332224L____ 24"L

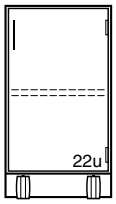

M10W332215-____ 15"L
M10W332218-____ 18"L
M10W332221-____ 21"L
M10W332224-____ 24"L

Cupboard Cabinets with Pullboards

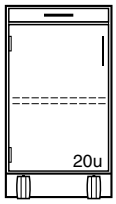

M15W332215L____ 15"L
M15W332218L____ 18"L
M15W332221L____ 21"L
M15W332224L____ 24"L

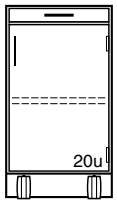

M15W332215-____ 15"L
M15W332218-____ 18"L
M15W332221-____ 21"L
M15W332224-____ 24"L

Drawer/Cupboard Cabinets

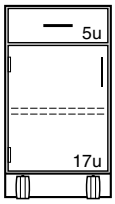

M20W332215L____ 15"L
M20W332218L____ 18"L
M20W332221L____ 21"L
M20W332224L____ 24"L

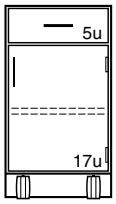

M20W332215-____ 15"L
M20W332218-____ 18"L
M20W332221-____ 21"L
M20W332224-____ 24"L

Drawer/Cupboard Cabinets with Pullboards

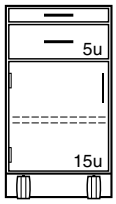

M25W332215L____ 15"L
M25W332218L____ 18"L
M25W332221L____ 21"L
M25W332224L____ 24"L

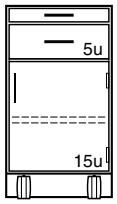

M25W332215-____ 15"L
M25W332218-____ 18"L
M25W332221-____ 21"L
M25W332224-____ 24"L

Drawer Cabinets

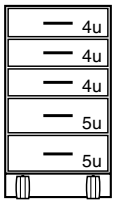

M50W332215-____ 15"L
M50W332218-____ 18"L
M50W332221-____ 21"L
M50W332224-____ 24"L

Drawer Cabinets with Pullboards

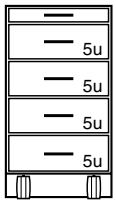

M45W332215-____ 15"L
M45W332218-____ 18"L
M45W332221-____ 21"L
M45W332224-____ 24"L

Note: Wood Mobile Cabinets are constructed with finished top panels. Tops may be added but are not required to close the top of the cabinet.

Tops are recommended on wood mobile cabinets with pullboards.

Tops must be ordered separately. *(see page 55)*

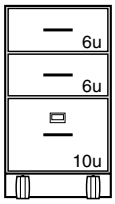

M62W332215-____ 15"L
M62W332218-____ 18"L
M62W332221-____ 21"L
M62W332224-____ 24"L

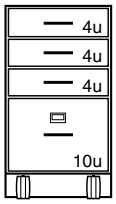

M63W332215-____ 15"L
M63W332218-____ 18"L
M63W332221-____ 21"L
M63W332224-____ 24"L

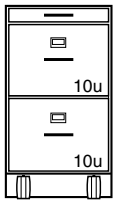

M75W332215-____ 15"L
M75W332218-____ 18"L
M75W332221-____ 21"L
M75W332224-____ 24"L

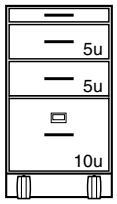

M67W332215-____ 15"L
M67W332218-____ 18"L
M67W332221-____ 21"L
M67W332224-____ 24"L

Illustrations and specifications are based on most current design and production information available. Kewaunee reserves the right to make changes at any time without notice.

Steel Sitting Height Mobile Cabinets

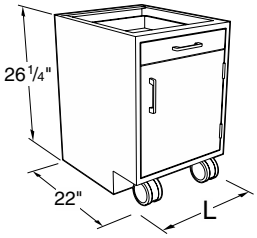

Specifications

Steel Sitting Height Mobile Cabinets are 26¼" high and 22" deep. Lengths as shown. Designed to fit under 30" high workstation frames.

Drawer cabinets are furnished with counter weights, multiple-drawer cabinets include an interlock system. All mobile cabinets have finished backs.

Note: Last four digits of part number designates door and drawer head style, hinge, hardwood species and pull selection. See page 48 for full explanation. Actual product may vary slightly from catalog illustration due to style and hardware selection.

Cupboard Cabinets

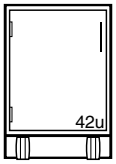

M10C262215L____15"L
M10C262218L____18"L
M10C262221L____21"L
M10C262224L____24"L

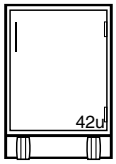

M10C262215-____15"L
M10C262218-____18"L
M10C262221-____21"L
M10C262224-____24"L

Note: Steel Mobile Cabinets are constructed with open top frames. Tops are required to close the top of the cabinets.

Tops must be ordered separately. *(see page 55)*

Drawer/Cupboard Cabinets

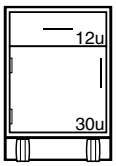

M20C262215L____15"L
M20C262218L____18"L
M20C262221L____21"L
M20C262224L____24"L

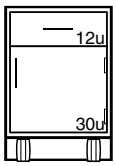

M20C262215-____15"L
M20C262218-____18"L
M20C262221-____21"L
M20C262224-____24"L

Drawer/Cupboard Cabinets with Pullboards

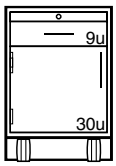

M25C262215L____15"L
M25C262218L____18"L
M25C262221L____21"L
M25C262224L____24"L

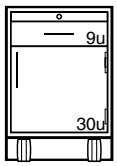

M25C262215-____15"L
M25C262218-____18"L
M25C262221-____21"L
M25C262224-____24"L

Drawer Cabinets

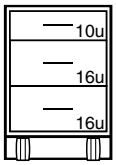

M30C262215-____15"L
M30C262218-____18"L
M30C262221-____21"L
M30C262224-____24"L

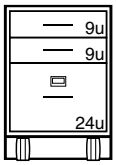

M62C262215-____15"L
M62C262218-____18"L
M62C262221-____21"L
M62C262224-____24"L

Drawer Cabinets with Pullboards

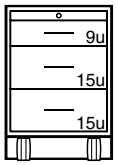

M35C262215-____15"L
M35C262218-____18"L
M35C262221-____21"L
M35C262224-____24"L

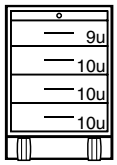

M45C262215-____15"L
M45C262218-____18"L
M45C262221-____21"L
M45C262224-____24"L

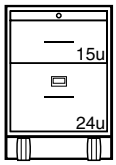

M66C262215-____15"L
M66C262218-____18"L
M66C262221-____21"L
M66C262224-____24"L

Illustrations and specifications are based on most current design and production information available. Kewaunee reserves the right to make changes at any time without notice.

Steel Standing Height Mobile Cabinets

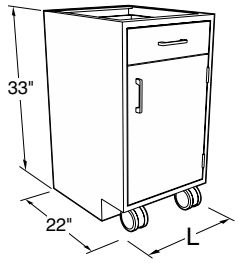

Specifications

Steel Standing Height Mobile Cabinets are 33" high and 22" deep. Lengths as shown. Designed to fit under 36" high workstation frames.

Drawer cabinets are furnished with counter weights, multiple-drawer cabinets include an interlock system. All mobile cabinets have finished backs.

Note: Last four digits of part number designates door and drawer head style, hinge, hardwood species and pull selection. See page 48 for full explanation. Actual product may vary slightly from catalog illustration due to style and hardware selection.

Cupboard Cabinets

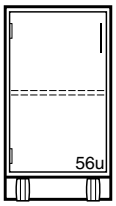

M10C332215L____15"L
M10C332218L____18"L
M10C332221L____21"L
M10C332224L____24"L

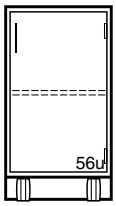

M10C332215-____15"L
M10C332218-____18"L
M10C332221-____21"L
M10C332224-____24"L

Note: Steel Mobile Cabinets are constructed with open top frames. Tops are required to close the top of the cabinets.

Tops must be ordered separately. *(see page 55)*

Drawer/Cupboard Cabinets

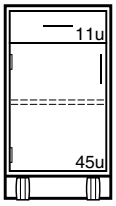

M20C332215L____15"L
M20C332218L____18"L
M20C332221L____21"L
M20C332224L____24"L

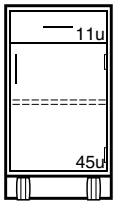

M20C332215-____15"L
M20C332218-____18"L
M20C332221-____21"L
M20C332224-____24"L

Drawer/Cupboard Cabinets with Pullboards

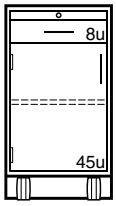

M25C332215L____15"L
M25C332218L____18"L
M25C332221L____21"L
M25C332224L____24"L

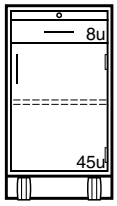

M25C332215-____15"L
M25C332218-____18"L
M25C332221-____21"L
M25C332224-____24"L

Drawer Cabinets

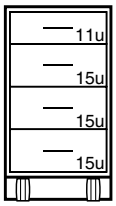

M40C332215-____15"L
M40C332218-____18"L
M40C332221-____21"L
M40C332224-____24"L

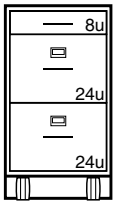

M71C332215-____15"L
M71C332218-____18"L
M71C332221-____21"L
M71C332224-____24"L

Drawer Cabinets with Pullboards

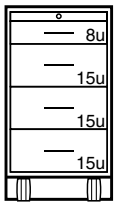

M46C332215-____15"L
M46C332218-____18"L
M46C332221-____21"L
M46C332224-____24"L

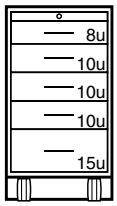

M56C332215-____15"L
M56C332218-____18"L
M56C332221-____21"L
M56C332224-____24"L

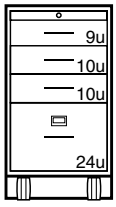

M68C332215-____15"L
M68C332218-____18"L
M68C332221-____21"L
M68C332224-____24"L

Illustrations and specifications are based on most current design and production information available. Kewaunee reserves the right to make changes at any time without notice.

Add-A-Drawer Mobile Cabinets

Specifications:

Add-A-Drawer Mobile Cabinets allow the removal of the top drawer assembly to convert the cabinet from standing height to sitting height. The base section of the add-a-drawer cabinet is 26¾" high, the add-on drawer 6¼", for an overall height of 33".

All add-a-drawer mobile cabinets have finished backs and counter-weights. The M95 four-drawer cabinet incorporates a drawer interlock system on the bottom three drawers.

The cabinets are a nominal 22" deep with lengths as shown. They are designed to fit under 30" and 36" high worksurface frames.

Cupboards have one adjustable shelf.

Tops of both the base section and the add-on drawer are finished to match the cabinet.

Note: Last four digits of part number designates door and drawer head style, hinge, hardwood species, and pull selection. See page 42 for full explanation. Actual product may vary slightly from catalog illustration due to style and hardware selection.

Tops may be added but are not required for a finished cabinet.

When desired, tops must be ordered separately. *(see page 55)*

Wood Add-A-Drawer Mobile Cabinets

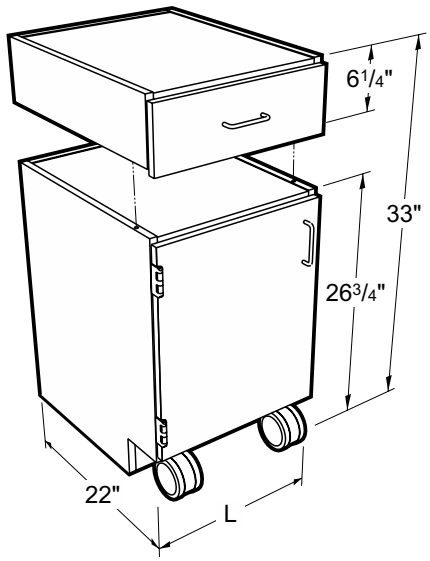

Drawer/Cupboard Cabinets

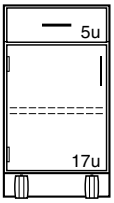

M90W332215L____ 15"L
M90W332218L____ 18"L
M90W332221L____ 21"L
M90W332224L____ 24"L

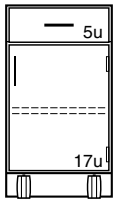

M90W332215-____ 15"L
M90W332218-____ 18"L
M90W332221-____ 21"L
M90W332224-____ 24"L

Drawer Cabinets

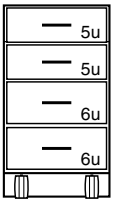

M95W332215-____ 15"L
M95W332218-____ 18"L
M95W332221-____ 21"L
M95W332224-____ 24"L

Illustrations and specifications are based on most current design and production information available. Kewaunee reserves the right to make changes at any time without notice.

KEWAUNEE Scientific Corporation

Mobile Cabinet Tops & Accessories

Specifications:

1" Thick Mobile Cabinet Tops are available in three depths, 22",23", or 24" and may be used on either Wood or Steel Mobile Cabinets. All edges are finished.

Steel Mobile Cabinet Tops are fabricated from 18 gauge steel and finished to match the cabinet. They are designed for steel mobile cabinets only and add less than 1/4" to the overall height of the cabinet.

Mobile Cabinet Grab Bar allows easier movement and relocation of mobile cabinets. Fabricated from powder coated steel or stainless steel, they may be used on either steel or wood mobile cabinets, with or without tops.

Bars must be attached in field with supplied screws and/or bolts.

1" Thick — Mobile Cabinet Top

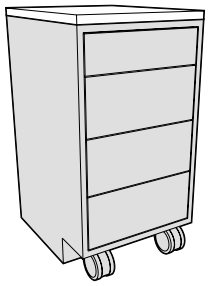

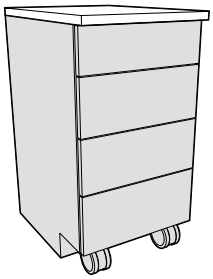

22" Deep *flush to front of case*

Length	Kemresin®	Kemresin Color Options	Black Phenolic Resin	Black Plastic Laminate
15"	**F94R2215-00-__**	**BK** = Black	**F94T2215-00**	**F94P2215-00**
18"	**F94R2218-00-__**	**GR** = Grey	**F94T2218-00**	**F94P2218-00**
21"	**F94R2221-00-__**	**PT** = Putty	**F94T2221-00**	**F94P2221-00**
24"	**F94R2224-00-__**	**SL** = Slate	**F94T2224-00**	**F94P2224-00**

23" Deep *flush to overlay door/drawer fronts - 1" overhang of case*

Length	Kemresin®	Kemresin Color Options	Black Phenolic Resin	Black Plastic Laminate
15"	**F94R2315-00-__**	**BK** = Black	**F94T2315-00**	**F94P2315-00**
18"	**F94R2318-00-__**	**GR** = Grey	**F94T2318-00**	**F94P2318-00**
21"	**F94R2321-00-__**	**PT** = Putty	**F94T2321-00**	**F94P2321-00**
24"	**F94R2324-00-__**	**SL** = Slate	**F94T2324-00**	**F94P2324-00**

24" Deep *1" overhang of overlay door/drawer fronts*

Length	Kemresin®	Kemresin Color Options	Black Phenolic Resin	Black Plastic Laminate
15"	**F94R2415-00-__**	**BK** = Black	**F94T2415-00**	**F94P2415-00**
18"	**F94R2418-00-__**	**GR** = Grey	**F94T2418-00**	**F94P2418-00**
21"	**F94R2421-00-__**	**PT** = Putty	**F94T2421-00**	**F94P2421-00**
24"	**F94R2424-00-__**	**SL** = Slate	**F94T2424-00**	**F94P2424-00**

Steel — Mobile Cabinet Top

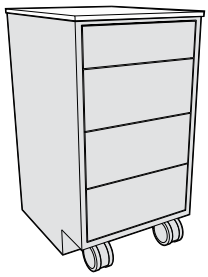

for Steel Mobile Cabinets only
top 22 1/8"deep

Length	Painted Steel
15"	**F94M2215-00**
18"	**F94M2218-00**
21"	**F94M2221-00**
24"	**F94M2224-00**

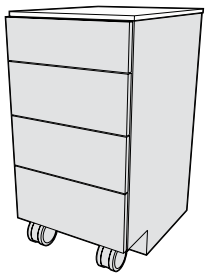

Mobile Cabinet Grab Bar

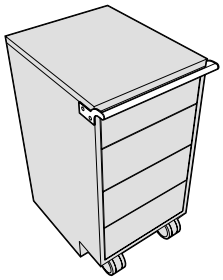

Length	Painted Steel	Stainless Steel
15"	**F73M0015-00**	**F73S0015-00**
18"	**F73M0018-00**	**F73S0018-00**
21"	**F73M0021-00**	**F73S0021-00**
24"	**F73M0024-00**	**F73S0024-00**

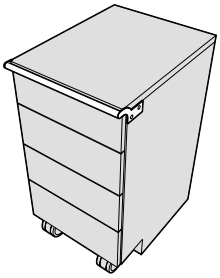

Illustrations and specifications are based on most current design and production information available. Kewaunee reserves the right to make changes at any time without notice.

Suspended Base Cabinets – 19" High

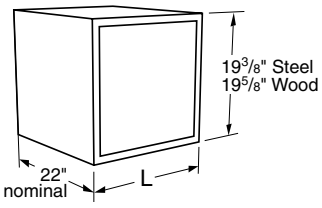

Specifications:

Suspended Base Cabinets are designed to hang beneath 30" or 36" deep worksurface frames. They are available in either steel or wood construction.

Cabinets on this page are a nominal 19" high, and are available in lengths shown.

See page 48 for designating cabinet style, door and drawer head material, and hardware selection.

Cupboard Base Cabinets

Steel Cabinet	Length	Wood Cabinet
C03C192215L____	15"	**C03W202215L____**
C03C192218L____	18"	**C03W202218L____**
C03C192221L____	21"	**C03W202221L____**
C03C192224L____	24"	**C03W202224L____**

Steel Cabinet	Length	Wood Cabinet
C03C192215-____	15"	**C03W202215-____**
C03C192218-____	18"	**C03W202218-____**
C03C192221-____	21"	**C03W202221-____**
C03C192224-____	24"	**C03W202224-____**

Drawer Base Cabinets

Steel Cabinet	Length	Wood Cabinet
D00C192215-____	30"	**D00W202215-_0__**
D00C192218-____	36"	**D00W202218-_0__**
D00C192221-____	42"	**D00W202221-_0__**
D00C192224-____	48"	**D00W202224-_0__**

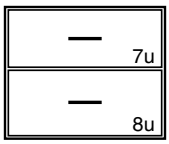

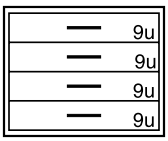

Steel Cabinet	Length	Wood Cabinet
D30C192215-____	15"	**D30W202215-_0__**
D30C192218-____	18"	**D30W202218-_0__**
D30C192221-____	21"	**D30W202221-_0__**
D30C192224-____	24"	**D30W202224-_0__**

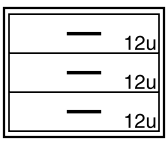

Steel Cabinet	Length	Wood Cabinet
D50C192215-____	15"	**D50W202215-_0__**
D50C192218-____	18"	**D50W202218-_0__**
D50C192221-____	21"	**D50W202221-_0__**
D50C192224-____	24"	**D50W202224-_0__**

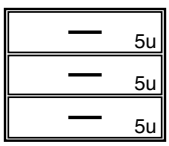

Illustrations and specifications are based on most current design and production information available. Kewaunee reserves the right to make changes at any time without notice.

KEWAUNEE Scientific Corporation

Suspended Base Cabinets – 19" High

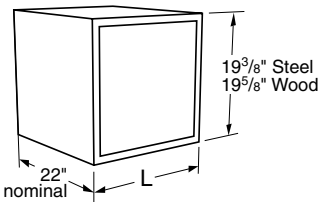

Specifications:

Suspended Base Cabinets are designed to hang beneath 30" or 36" deep worksurface frames. They are available in either steel or wood construction.

Cabinets on this page are a nominal 19" high, and are available in lengths shown.

See page 48 for designating cabinet style, door and drawer head material, and hardware selection.

Drawer Base Cabinets

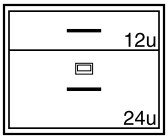

1 File Drawer with hangers

Steel Cabinet	Length	Wood Cabinet
D81C192215-____	15"	**D81W202215-_0__**
D81C192218-____	18"	**D81W202218-_0__**
D81C192221-____	21"	**D81W202221-_0__**
D81C192224-____	24"	**D81W202224-_0__**

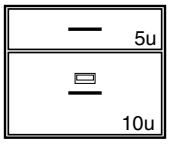

1 File Drawer with hangers

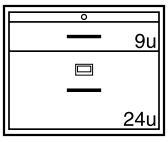

Steel Cabinet	Length	Wood Cabinet
D85C192215-____	15"	**D85W202215-_0__**
D85C192218-____	18"	**D85W202218-_0__**
D85C192221-____	21"	**D85W202221-_0__**
D85C192224-____	24"	**D85W202224-_0__**

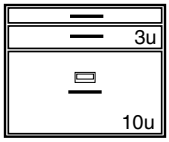

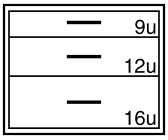

Steel Cabinet	Length	Wood Cabinet
D86C192215-____	15"	**D86W202215-_0__**
D86C192218-____	18"	**D86W202218-_0__**
D86C192221-____	21"	**D86W202221-_0__**
D86C192224-____	24"	**D86W202224-_0__**

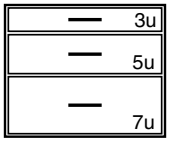

Illustrations and specifications are based on most current design and production information available. Kewaunee reserves the right to make changes at any time without notice.

Suspended Base Cabinets – 25" High

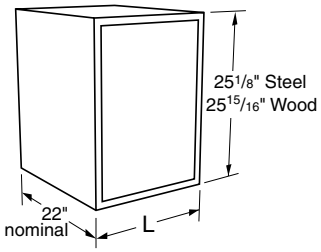

Specifications:

Suspended Base Cabinets are designed to hang beneath 30" or 36" deep worksurface frames. They are available in either steel or wood construction.

Cabinets on this page are a nominal 25" high, and are available in lengths shown.

See page 48 for designating cabinet style, door and drawer head material, and hardware selection.

Cupboard Base Cabinets

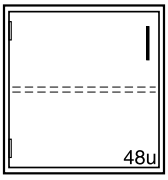

Steel Cabinet	Length	Wood Cabinet
C03C252215L____	15"	**C03W262215L_0__**
C03C252218L____	18"	**C03W262218L_0__**
C03C252221L____	21"	**C03W262221L_0__**
C03C252224L____	24"	**C03W262224L_0__**

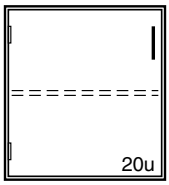

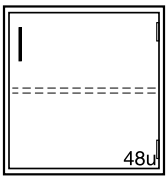

Steel Cabinet	Length	Wood Cabinet
C03C252215-____	15"	**C03W262215-_0__**
C03C252218-____	18"	**C03W262218-_0__**
C03C252221-____	21"	**C03W262221-_0__**
C03C252224-____	24"	**C03W262224-_0__**

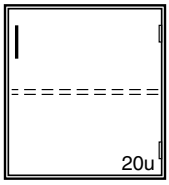

Drawer Base Cabinets

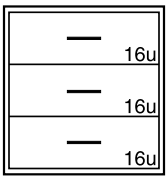

Steel Cabinet	Length	Wood Cabinet
D00C252215-____	15"	**D00W262215-_0__**
D00C252218-____	18"	**D00W262218-_0__**
D00C252221-____	21"	**D00W262221-_0__**
D00C252224-____	24"	**D00W262224-_0__**

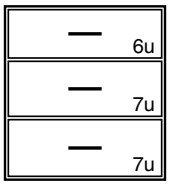

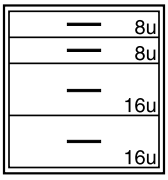

Steel Cabinet	Length	Wood Cabinet
D08C252215-____	15"	**D08W262215-_0__**
D08C252218-____	18"	**D08W262218-_0__**
D08C252221-____	21"	**D08W262221-_0__**
D08C252224-____	24"	**D08W262224-_0__**

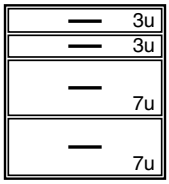

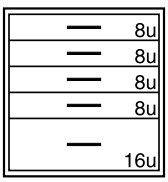

Steel Cabinet	Length	Wood Cabinet
D10C252215-____	15"	**D10W262215-_0__**
D10C252218-____	18"	**D10W262218-_0__**
D10C252221-____	21"	**D10W262221-_0__**
D10C252224-____	24"	**D10W262224-_0__**

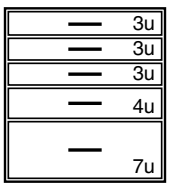

Illustrations and specifications are based on most current design and production information available. Kewaunee reserves the right to make changes at any time without notice.

KEWAUNEE Scientific Corporation

Suspended Base Cabinets – 25" High

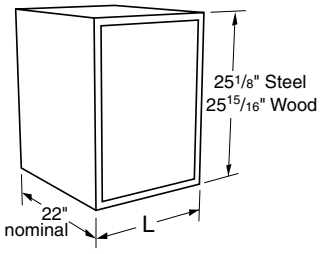

Specifications:

Suspended Base Cabinets are designed to hang beneath 30" or 36" deep worksurface frames. They are available in either steel or wood construction.

Cabinets on this page are a nominal 25" high, and are available in lengths shown.

See page 48 for designating cabinet style, door and drawer head material, and hardware selection.

Drawer Base Cabinets

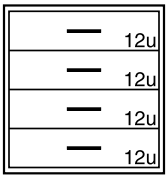

Steel Cabinet	Length	Wood Cabinet
D30C252215-____	15"	**D30W262215-_0__**
D30C252218-____	18"	**D30W262218-_0__**
D30C252221-____	21"	**D30W262221-_0__**
D30C252224-____	24"	**D30W262224-_0__**

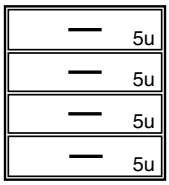

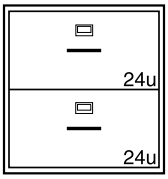

Steel Cabinet	Length	Wood Cabinet
D81C252215-____	15"	**D81W262215-_0__**
D81C252218-____	18"	**D81W262218-_0__**
D81C252221-____	21"	**D81W262221-_0__**
D81C252224-____	24"	**D81W262224-_0__**

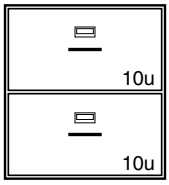

2 File Drawers with hangers

2 File Drawers with hangers

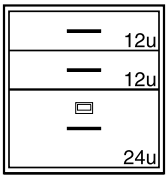

Steel Cabinet	Length	Wood Cabinet
D85C252215-____	15"	**D85W262215-_0__**
D85C252218-____	18"	**D85W262218-_0__**
D85C252221-____	21"	**D85W262221-_0__**
D85C252224-____	24"	**D85W262224-_0__**

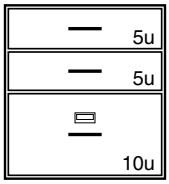

1 File Drawer with hangers

1 File Drawer with hangers

Illustrations and specifications are based on most current design and production information available. Kewaunee reserves the right to make changes at any time without notice.

Suspended Base Cabinets – 25" High

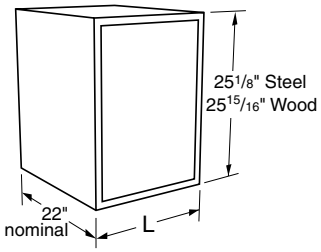

Specifications:

Suspended Base Cabinets are designed to hang beneath 30" or 36" deep worksurface frames. They are available in either steel or wood construction.

Cabinets on this page are a nominal 25" high, and are available in lengths shown.

See page 48 for designating cabinet style, door and drawer head material, and hardware selection.

Drawer & Cupboard Base Cabinets

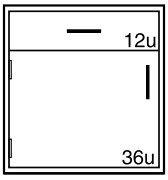

Steel Cabinet	Length	Wood Cabinet
E40C252215L____	15"	**E40W262215L____**
E40C252218L____	18"	**E40W262218L____**
E40C252221L____	21"	**E40W262221L____**
E40C252224L____	24"	**E40W262224L____**

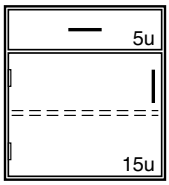

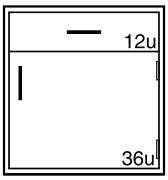

Steel Cabinet	Length	Wood Cabinet
E40C252215-____	15"	**E40W262215-____**
E40C252218-____	18"	**E40W262218-____**
E40C252221-____	21"	**E40W262221-____**
E40C252224-____	24"	**E40W262224-____**

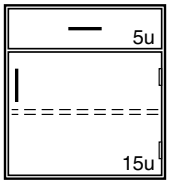

Illustrations and specifications are based on most current design and production information available. Kewaunee reserves the right to make changes at any time without notice.

KEWAUNEE Scientific Corporation

Steel Suspended Drawer Units

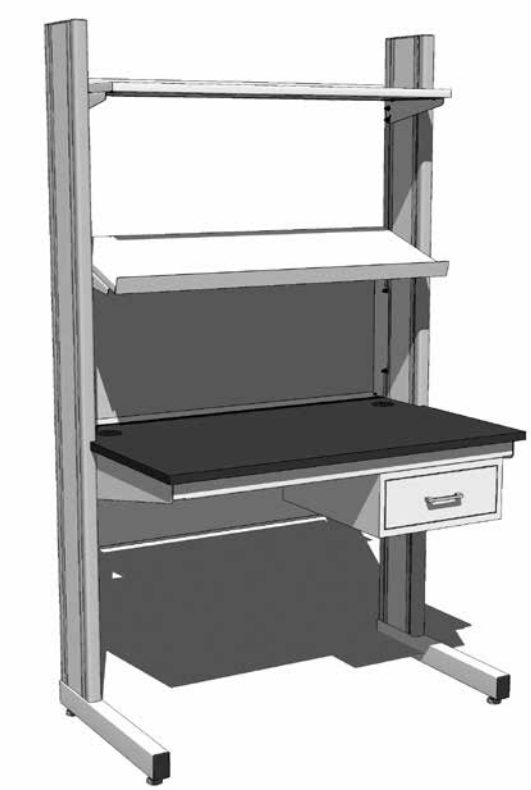

Steel Suspended Drawer Units are designed to hang beneath 30" or 36" deep module frames. They are available in steel construction only and are furnished complete with all required mounting hardware.

Steel Suspended Drawer Units may be stacked to create multiple drawer unit assemblies.

Note: Last four digits of part number designates drawer head style and pull selection. See page 48 for full explanation. Actual product may vary slightly from catalog illustration due to style and hardware selection.

Steel Suspended Drawer Units

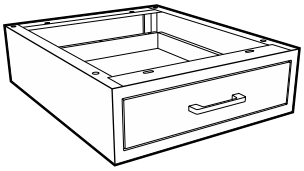

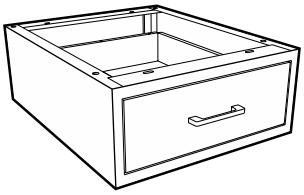

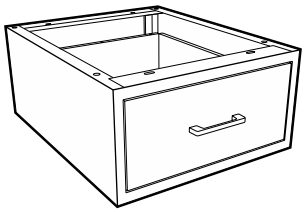

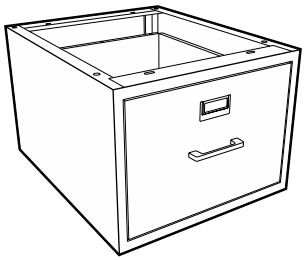

5 1/2" High Drawer Unit	L
D00C062215-____	15"
D00C062218-____	18"
D00C062221-____	21"
D00C062224-____	24"
Overall Dimensions	
Overall Height	5 1/2"
Overall Depth	22"
Drawer Head Height	3 3/4"
Inside Dimensions	
Height/Clearance	2 3/8"
Front-to-back	18"

7 1/2" High Drawer Unit	L
D00C082215-____	15"
D00C082218-____	18"
D00C082221-____	21"
D00C082224-____	24"
Overall Dimensions	
Overall Height	7 1/2"
Overall Depth	22"
Drawer Head Height	5 11/16"
Inside Dimensions	
Height/Clearance	4 7/16"
Front-to-back	18"

9" High Drawer Unit	L
D00C092215-____	15"
D00C092218-____	18"
D00C092221-____	21"
D00C092224-____	24"
Overall Dimensions	
Overall Height	9"
Overall Depth	22"
Drawer Head Height	7 1/8"
Inside Dimensions	
Height/Clearance	5 7/8"
Front-to-back	18"

File Drawer Unit	L
D00C132215-____	15"
D00C132218-____	18"
D00C132221-____	21"
D00C132224-____	24"
Overall Dimensions	
Overall Height	13 1/4"
Overall Depth	22"
Drawer Head Height	11 1/2"
Inside Dimensions	
Height/Clearance	10 1/4"
Front-to-back	18"

Illustrations and specifications are based on most current design and production information available. Kewaunee reserves the right to make changes at any time without notice.

Upper Storage Cabinets

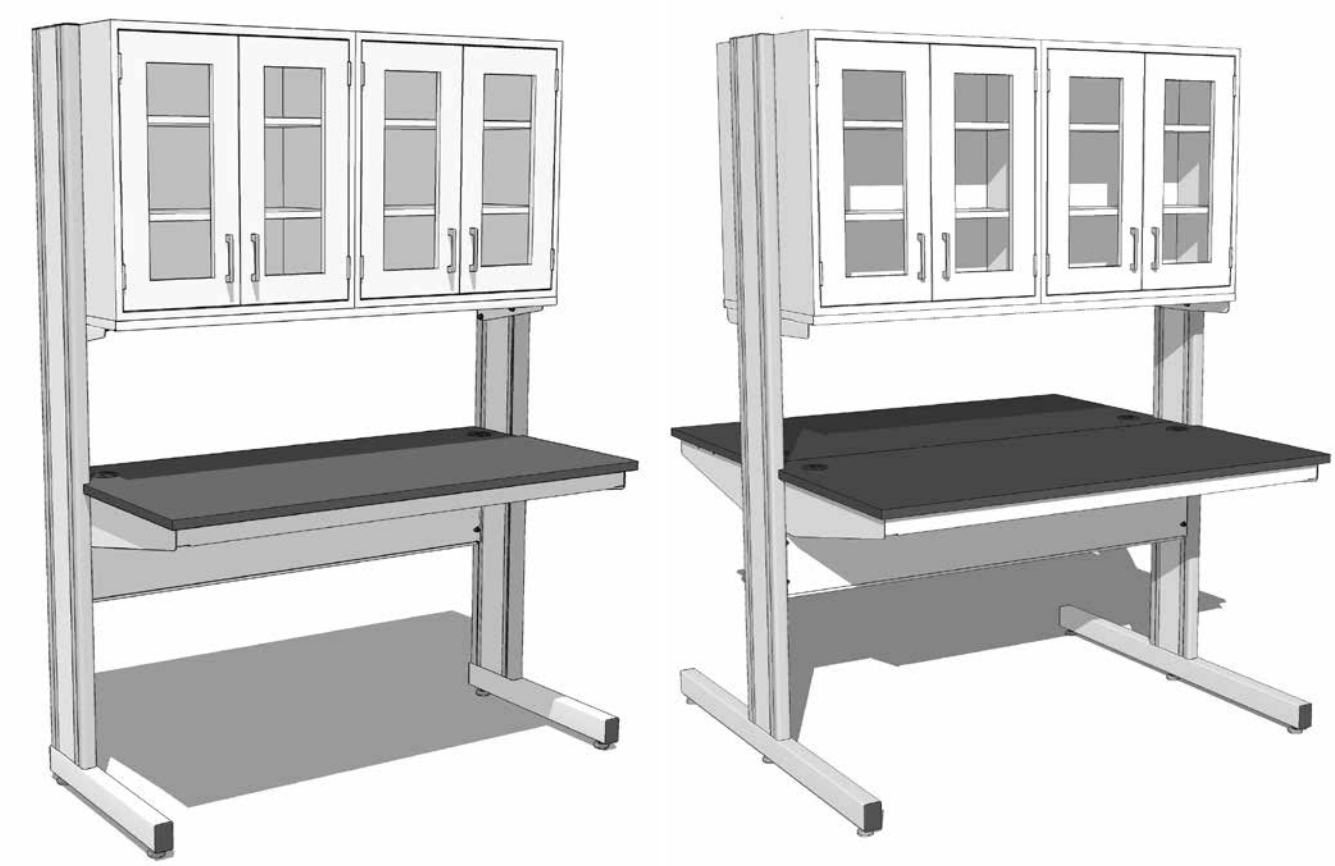

Sliding Plate Glass Door Cabinets

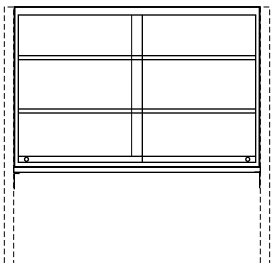

Single-sided Steel Cabinets Single-sided Wood Cabinets

Depth	Steel Cabinet	Length	Wood Cabinet	Depth
12¾"	**FW10C301330-00_0**	30"	**FW10W301230-00_0**	12"
12¾"	**FW10C301336-00_0**	36"	**FW10W301236-00_0**	12"
12¾"	**FW10C301342-00_0**	42"	**FW10W301242-00_0**	12"
12¾"	**FW10C301348-00_0**	48"	**FW10W301248-00_0**	12"
16"	**FW10C301630-00_0**	30"	**FW10W301630-00_0**	16"
16"	**FW10C301636-00_0**	36"	**FW10W301636-00_0**	16"
16"	**FW10C301642-00_0**	42"	**FW10W301642-00_0**	16"
16"	**FW10C301648-00_0**	48"	**FW10W301648-00_0**	16"

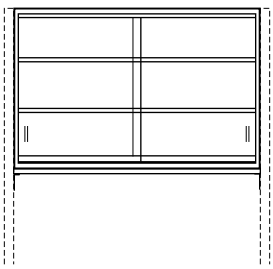

Double-sided Steel Cabinets Double-sided Wood Cabinets

Depth	Steel Cabinet	Length	Wood Cabinet	Depth
25½"	**FW10C302630-00_0**	30"	**FW10W302430-00_0**	24"
25½"	**FW10C302636-00_0**	36"	**FW10W302436-00_0**	24"
25½"	**FW10C302642-00_0**	42"	**FW10W302442-00_0**	24"
25½"	**FW10C302648-00_0**	48"	**FW10W302448-00_0**	24"
32"	**FW10C303230-00_0**	30"	**FW10W303230-00_0**	32"
32"	**FW10C303236-00_0**	36"	**FW10W303236-00_0**	32"
32"	**FW10C303242-00_0**	42"	**FW10W303242-00_0**	32"
32"	**FW10C303248-00_0**	48"	**FW10W303248-00_0**	32"

Illustrations and specifications are based on most current design and production information available. Kewaunee reserves the right to make changes at any time without notice.

KEWAUNEE Scientific Corporation

Upper Storage Cabinets

Upper Storage Cabinets are used in place of open shelving when enclosed storage and/or resistance to dust is required. Cabinets are available in powder coated steel or hardwood veneer plywood construction, and in a variety of door styles. All Evolution upper cabinets are 30" high and include two adjustable shelves. Double-sided cabinets use two single-sided cabinets mounted back-to-back on a single support assembly. Cabinets mount between columns and include support assembly and mounting hardware.

Note: Last four digits of part number designates cabinet/door style and hardward selection. See page 48 for full explanation. Actual product may vary slightly from catalog illustration due to style and hardware selection.

Sliding Glazed Door Cabinets

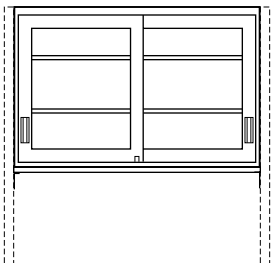

Single-sided Steel Cabinets

Depth	Steel Cabinet	Length
12¾"	**FW11C301330-00_0**	30"
12¾"	**FW11C301336-00_0**	36"
12¾"	**FW11C301342-00_0**	42"
12¾"	**FW11C301348-00_0**	48"
16"	**FW11C301630-00_0**	30"
16"	**FW11C301636-00_0**	36"
16"	**FW11C301642-00_0**	42"
16"	**FW11C301648-00_0**	48"

Single-sided Wood Cabinets

Wood Cabinet	Depth
FW11W301230-00_0	12"
FW11W301236-00_0	12"
FW11W301242-00_0	12"
FW11W301248-00_0	12"
FW11W301630-00_0	16"
FW11W301636-00_0	16"
FW11W301642-00_0	16"
FW11W301648-00_0	16"

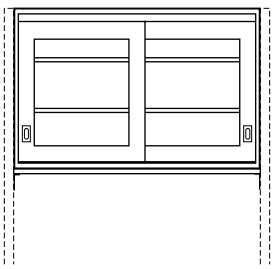

Double-sided Steel Cabinets

Depth	Steel Cabinet	Length
25½"	**FW11C302630-00_0**	30"
25½"	**FW11C302636-00_0**	36"
25½"	**FW11C302642-00_0**	42"
25½"	**FW11C302648-00_0**	48"
32"	**FW11C303230-00_0**	30"
32"	**FW11C303236-00_0**	36"
32"	**FW11C303242-00_0**	42"
32"	**FW11C303248-00_0**	48"

Double-sided Wood Cabinets

Wood Cabinet	Depth
FW11W302430-00_0	24"
FW11W302436-00_0	24"
FW11W302442-00_0	24"
FW11W302448-00_0	24"
FW11W303230-00_0	32"
FW11W303236-00_0	32"
FW11W303242-00_0	32"
FW11W303248-00_0	32"

Sliding Panel Door Cabinets

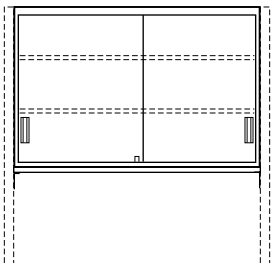

Single-sided Steel Cabinets

Depth	Steel Cabinet	Length
12¾"	**FW12C301330-00_0**	30"
12¾"	**FW12C301336-00_0**	36"
12¾"	**FW12C301342-00_0**	42"
12¾"	**FW12C301348-00_0**	48"
16"	**FW12C301630-00_0**	30"
16"	**FW12C301636-00_0**	36"
16"	**FW12C301642-00_0**	42"
16"	**FW12C301648-00_0**	48"

Single-sided Wood Cabinets

Wood Cabinet	Depth
FW12W301230-00_0	12"
FW12W301236-00_0	12"
FW12W301242-00_0	12"
FW12W301248-00_0	12"
FW12W301630-00_0	16"
FW12W301636-00_0	16"
FW12W301642-00_0	16"
FW12W301648-00_0	16"

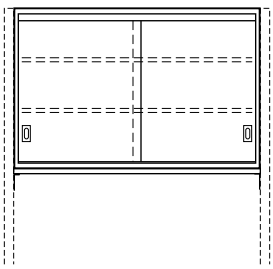

Double-sided Steel Cabinets

Depth	Steel Cabinet	Length
25½"	**FW12C302630-00_0**	30"
25½"	**FW12C302636-00_0**	36"
25½"	**FW12C302642-00_0**	42"
25½"	**FW12C302648-00_0**	48"
32"	**FW12C303230-00_0**	30"
32"	**FW12C303236-00_0**	36"
32"	**FW12C303242-00_0**	42"
32"	**FW12C303248-00_0**	48"

Double-sided Wood Cabinets

Wood Cabinet	Depth
FW12W302430-00_0	24"
FW12W302436-00_0	24"
FW12W302442-00_0	24"
FW12W302448-00_0	24"
FW12W303230-00_0	32"
FW12W303236-00_0	32"
FW12W303242-00_0	32"
FW12W303248-00_0	32"

Illustrations and specifications are based on most current design and production information available. Kewaunee reserves the right to make changes at any time without notice.

Upper Storage Cabinets

Upper Storage Cabinets are used in place of open shelving when enclosed storage and/or resistance to dust is required. Cabinets are available in powder coated steel or hardwood veneer plywood construction, and in a variety of door styles. All Evolution upper cabinets are 30" high and include two adjustable shelves. Double-sided cabinets use two single-sided cabinets mounted back-to-back on a single support assembly. Cabinets mount between columns and include support assembly and mounting hardware.

Note: Last four digits of part number designates cabinet/door style and hardward selection. See page 48 for full explanation. Actual product may vary slightly from catalog illustration due to style and hardware selection.

Swinging Glazed Door Cabinets

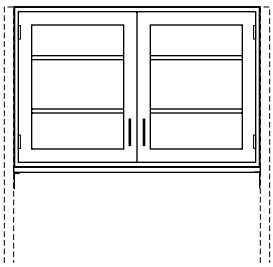

Single-sided Steel Cabinets Single-sided Wood Cabinets

Depth	Steel Cabinet	Length	Wood Cabinet	Depth
12¾"	**FW20C301330-00_0**	30"	**FW20W301230-00_0**	12"
12¾"	**FW20C301336-00_0**	36"	**FW20W301236-00_0**	12"
12¾"	**FW20C301342-00_0**	42"	**FW20W301242-00_0**	12"
12¾"	**FW20C301348-00_0**	48"	**FW20W301248-00_0**	12"
16"	**FW20C301630-00_0**	30"	**FW20W301630-00_0**	16"
16"	**FW20C301636-00_0**	36"	**FW20W301636-00_0**	16"
16"	**FW20C301642-00_0**	42"	**FW20W301642-00_0**	16"
16"	**FW20C301648-00_0**	48"	**FW20W301648-00_0**	16"

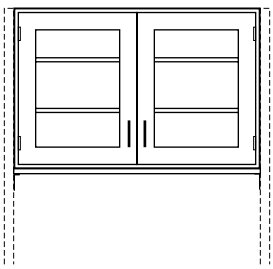

Double-sided Steel Cabinets Double-sided Wood Cabinets

Depth	Steel Cabinet	Length	Wood Cabinet	Depth
25½"	**FW20C302630-00_0**	30"	**FW20W302430-00_0**	24"
25½"	**FW20C302636-00_0**	36"	**FW20W302436-00_0**	24"
25½"	**FW20C302642-00_0**	42"	**FW20W302442-00_0**	24"
25½"	**FW20C302648-00_0**	48"	**FW20W302448-00_0**	24"
32"	**FW20C303230-00_0**	30"	**FW20W303230-00_0**	32"
32"	**FW20C303236-00_0**	36"	**FW20W303236-00_0**	32"
32"	**FW20C303242-00_0**	42"	**FW20W303242-00_0**	32"
32"	**FW20C303248-00_0**	48"	**FW20W303248-00_0**	32"

Swinging Panel Door Cabinets

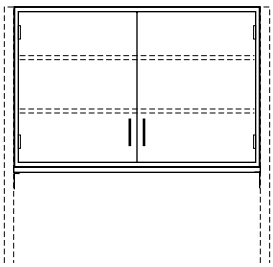

Single-sided Steel Cabinets Single-sided Wood Cabinets

Depth	Steel Cabinet	Length	Wood Cabinet	Depth
12¾"	**FW25C301330-00_0**	30"	**FW25W301230-00_0**	12"
12¾"	**FW25C301336-00_0**	36"	**FW25W301236-00_0**	12"
12¾"	**FW25C301342-00_0**	42"	**FW25W301242-00_0**	12"
12¾"	**FW25C301348-00_0**	48"	**FW25W301248-00_0**	12"
16"	**FW25C301630-00_0**	30"	**FW25W301630-00_0**	16"
16"	**FW25C301636-00_0**	36"	**FW25W301636-00_0**	16"
16"	**FW25C301642-00_0**	42"	**FW25W301642-00_0**	16"
16"	**FW25C301648-00_0**	48"	**FW25W301648-00_0**	16"

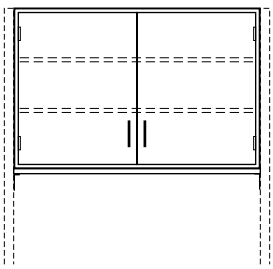

Double-sided Steel Cabinets Double-sided Wood Cabinets

Depth	Steel Cabinet	Length	Wood Cabinet	Depth
25½"	**FW25C302630-00_0**	30"	**FW25W302430-00_0**	24"
25½"	**FW25C302636-00_0**	36"	**FW25W302436-00_0**	24"
25½"	**FW25C302642-00_0**	42"	**FW25W302442-00_0**	24"
25½"	**FW25C302648-00_0**	48"	**FW25W302448-00_0**	24"
32"	**FW25C303230-00_0**	30"	**FW25W303230-00_0**	32"
32"	**FW25C303236-00_0**	36"	**FW25W303236-00_0**	32"
32"	**FW25C303242-00_0**	42"	**FW25W303242-00_0**	32"
32"	**FW25C303248-00_0**	48"	**FW25W303248-00_0**	32"

Illustrations and specifications are based on most current design and production information available. Kewaunee reserves the right to make changes at any time without notice.

KEWAUNEE Scientific Corporation

Pass-thru Upper Storage Cabinets

Sliding Plate Glass Door Cabinets

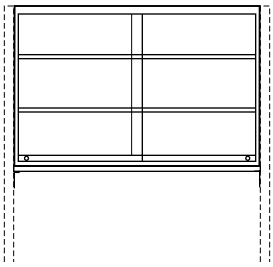

Depth	Steel Cabinet	Length	Wood Cabinet	Depth
16"	**FW13C301630-00_0**	30"	**FW13W301630-00_0**	16"
16"	**FW13C301636-00_0**	36"	**FW13W301636-00_0**	16"
16"	**FW13C301642-00_0**	42"	**FW13W301642-00_0**	16"
16"	**FW13C301648-00_0**	48"	**FW13W301648-00_0**	16"
22"	**FW13C302230-00_0**	30"	**FW13W302230-00_0**	22"
22"	**FW13C302236-00_0**	36"	**FW13W302236-00_0**	22"
22"	**FW13C302242-00_0**	42"	**FW13W302242-00_0**	22"
22"	**FW13C302248-00_0**	48"	**FW13W302248-00_0**	22"

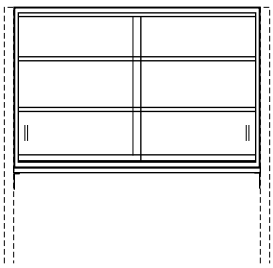

Sliding Glazed Glass Door Cabinets

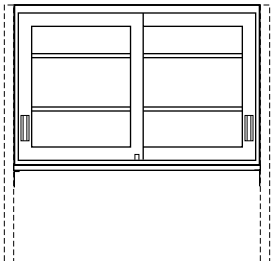

Depth	Steel Cabinet	Length	Wood Cabinet	Depth
16"	**FW14C301630-00_0**	30"	**FW14W301630-00_0**	16"
16"	**FW14C301636-00_0**	36"	**FW14W301636-00_0**	16"
16"	**FW14C301642-00_0**	42"	**FW14W301642-00_0**	16"
16"	**FW14C301648-00_0**	48"	**FW14W301648-00_0**	16"
22"	**FW14C302230-00_0**	30"	**FW14W302230-00_0**	22"
22"	**FW14C302236-00_0**	36"	**FW14W302236-00_0**	22"
22"	**FW14C302242-00_0**	42"	**FW14W302242-00_0**	22"
22"	**FW14C302248-00_0**	48"	**FW14W302248-00_0**	22"

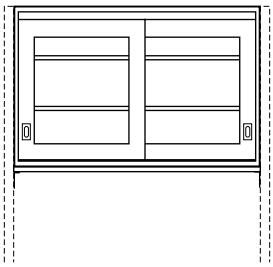

Sliding Panel Door Cabinets

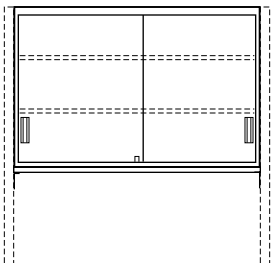

Depth	Steel Cabinet	Length	Wood Cabinet	Depth
16"	**FW15C301630-00_0**	30"	**FW15W301630-00_0**	16"
16"	**FW15C301636-00_0**	36"	**FW15W301636-00_0**	16"
16"	**FW15C301642-00_0**	42"	**FW15W301642-00_0**	16"
16"	**FW15C301648-00_0**	48"	**FW15W301648-00_0**	16"
22"	**FW15C302230-00_0**	30"	**FW15W302230-00_0**	22"
22"	**FW15C302236-00_0**	36"	**FW15W302236-00_0**	22"
22"	**FW15C302242-00_0**	42"	**FW15W302242-00_0**	22"
22"	**FW15C302248-00_0**	48"	**FW15W302248-00_0**	22"

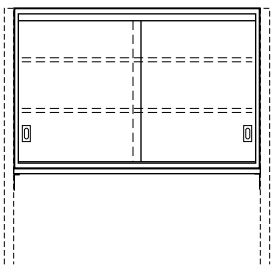

Swinging Glazed Door Cabinets

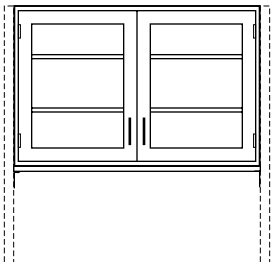

Depth	Steel Cabinet	Length	Wood Cabinet	Depth
16"	**FW23C301630-00_0**	30"	**FW23W301630-00_0**	16"
16"	**FW23C301636-00_0**	36"	**FW23W301636-00_0**	16"
16"	**FW23C301642-00_0**	42"	**FW23W301642-00_0**	16"
16"	**FW23C301648-00_0**	48"	**FW23W301648-00_0**	16"
22"	**FW23C302230-00_0**	30"	**FW23W302230-00_0**	22"
22"	**FW23C302236-00_0**	36"	**FW23W302236-00_0**	22"
22"	**FW23C302242-00_0**	42"	**FW23W302242-00_0**	22"
22"	**FW23C302248-00_0**	48"	**FW23W302248-00_0**	22"

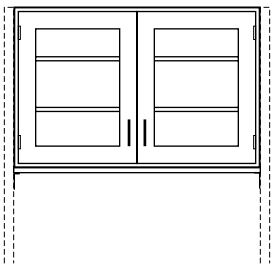

Swinging Panel Door Cabinets

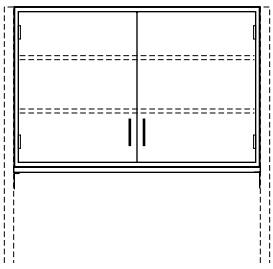

Depth	Steel Cabinet	Length	Wood Cabinet	Depth
16"	**FW28C301630-00_0**	30"	**FW28W301630-00_0**	16"
16"	**FW28C301636-00_0**	36"	**FW28W301636-00_0**	16"
16"	**FW28C301642-00_0**	42"	**FW28W301642-00_0**	16"
16"	**FW28C301648-00_0**	48"	**FW28W301648-00_0**	16"
22"	**FW28C302230-00_0**	30"	**FW28W302230-00_0**	22"
22"	**FW28C302236-00_0**	36"	**FW28W302236-00_0**	22"
22"	**FW28C302242-00_0**	42"	**FW28W302242-00_0**	22"
22"	**FW28C302248-00_0**	48"	**FW28W302248-00_0**	22"

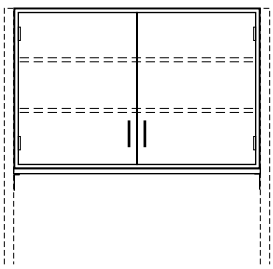

Illustrations and specifications are based on most current design and production information available. Kewaunee reserves the right to make changes at any time without notice.

Upper Storage Cabinets

Upper Storage Cabinets are used in place of open shelving when enclosed storage and/or resistance to dust is required. Cabinets are available in powder coated steel or hardwood veneer plywood construction, and in a variety of door styles. All Evolution upper cabinets are 30" high and include two adjustable shelves. Double-sided cabinets use two single-sided cabinets mounted back-to-back on a single support assembly. Cabinets mount between columns and include support assembly and mounting hardware.

Note: Last four digits of part number designates cabinet/door style and hardward selection. See page 48 for full explanation. Actual product may vary slightly from catalog illustration due to style and hardware selection.

Sliding Plate Glass Door Cabinets

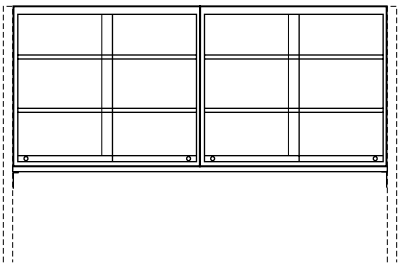

Single-sided Steel Cabinets

Depth	Steel Cabinet	Length
12¾"	**FW10C301354-00_0**	54"
12¾"	**FW10C301360-00_0**	60"
12¾"	**FW10C301366-00_0**	66"
12¾"	**FW10C301372-00_0**	72"
12¾"	**FW10C301378-00_0**	78"
12¾"	**FW10C301384-00_0**	84"
12¾"	**FW10C301390-00_0**	90"
12¾"	**FW10C301396-00_0**	96"
16"	**FW10C301654-00_0**	54"
16"	**FW10C301660-00_0**	60"
16"	**FW10C301666-00_0**	66"
16"	**FW10C301672-00_0**	72"
16"	**FW10C301678-00_0**	78"
16"	**FW10C301684-00_0**	84"
16"	**FW10C301690-00_0**	90"
16"	**FW10C301696-00_0**	96"

Double-sided Steel Cabinets

Depth	Steel Cabinet	Length
25½"	**FW10C302654-00_0**	54"
25½"	**FW10C302660-00_0**	60"
25½"	**FW10C302666-00_0**	66"
25½"	**FW10C302672-00_0**	72"
25½"	**FW10C302678-00_0**	78"
25½"	**FW10C302684-00_0**	84"
25½"	**FW10C302690-00_0**	90"
25½"	**FW10C302696-00_0**	96"
32"	**FW10C303254-00_0**	54"
32"	**FW10C303260-00_0**	60"
32"	**FW10C303266-00_0**	66"
32"	**FW10C303272-00_0**	72"
32"	**FW10C303278-00_0**	78"
32"	**FW10C303284-00_0**	84"
32"	**FW10C303290-00_0**	90"
32"	**FW10C303296-00_0**	96"

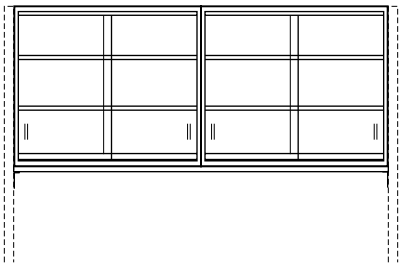

Single-sided Wood Cabinets

Depth	Wood Cabinet	Length
12"	**FW10W301254-00_0**	54"
12"	**FW10W301260-00_0**	60"
12"	**FW10W301266-00_0**	66"
12"	**FW10W301272-00_0**	72"
12"	**FW10W301278-00_0**	78"
12"	**FW10W301284-00_0**	84"
12"	**FW10W301290-00_0**	90"
12"	**FW10W301296-00_0**	96"
16"	**FW10W301654-00_0**	54"
16"	**FW10W301660-00_0**	60"
16"	**FW10W301666-00_0**	66"
16"	**FW10W301672-00_0**	72"
16"	**FW10W301678-00_0**	78"
16"	**FW10W301684-00_0**	84"
16"	**FW10W301690-00_0**	90"
16"	**FW10W301696-00_0**	96"

Double-sided Wood Cabinets

Depth	Wood Cabinet	Length
24"	**FW10W302454-00_0**	54"
24"	**FW10W302460-00_0**	60"
24"	**FW10W302466-00_0**	66"
24"	**FW10W302472-00_0**	72"
24"	**FW10W302478-00_0**	78"
24"	**FW10W302484-00_0**	84"
24"	**FW10W302490-00_0**	90"
24"	**FW10W302496-00_0**	96"
32"	**FW10W303254-00_0**	54"
32"	**FW10W303260-00_0**	60"
32"	**FW10W303266-00_0**	66"
32"	**FW10W303272-00_0**	72"
32"	**FW10W303278-00_0**	78"
32"	**FW10W303284-00_0**	84"
32"	**FW10W303290-00_0**	90"
32"	**FW10W303296-00_0**	96"

Illustrations and specifications are based on most current design and production information available. Kewaunee reserves the right to make changes at any time without notice.

KEWAUNEE Scientific Corporation

Upper Storage Cabinets

Upper Storage Cabinets are used in place of open shelving when enclosed storage and/or resistance to dust is required. Cabinets are available in powder coated steel or hardwood veneer plywood construction, and in a variety of door styles. All Evolution upper cabinets are 30" high and include two adjustable shelves. Double-sided cabinets use two single-sided cabinets mounted back-to-back on a single support assembly. Cabinets mount between columns and include support assembly and mounting hardware.

Note: Last four digits of part number designates cabinet/door style and hardward selection. See page 48 for full explanation. Actual product may vary slightly from catalog illustration due to style and hardware selection.

Sliding Glazed Door Cabinets

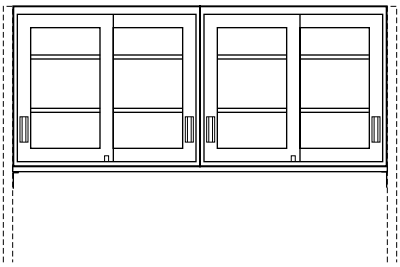

Single-sided Steel Cabinets

Depth	Steel Cabinet	Length
12¾"	**FW11C301354-00_0**	54"
12¾"	**FW11C301360-00_0**	60"
12¾"	**FW11C301366-00_0**	66"
12¾"	**FW11C301372-00_0**	72"
12¾"	**FW11C301378-00_0**	78"
12¾"	**FW11C301384-00_0**	84"
12¾"	**FW11C301390-00_0**	90"
12¾"	**FW11C301396-00_0**	96"
16"	**FW11C301654-00_0**	54"
16"	**FW11C301660-00_0**	60"
16"	**FW11C301666-00_0**	66"
16"	**FW11C301672-00_0**	72"
16"	**FW11C301678-00_0**	78"
16"	**FW11C301684-00_0**	84"
16"	**FW11C301690-00_0**	90"
16"	**FW11C301696-00_0**	96"

Double-sided Steel Cabinets

Depth	Steel Cabinet	Length
25½"	**FW11C302654-00_0**	54"
25½"	**FW11C302660-00_0**	60"
25½"	**FW11C302666-00_0**	66"
25½"	**FW11C302672-00_0**	72"
25½"	**FW11C302678-00_0**	78"
25½"	**FW11C302684-00_0**	84"
25½"	**FW11C302690-00_0**	90"
25½"	**FW11C302696-00_0**	96"
32"	**FW11C303254-00_0**	54"
32"	**FW11C303260-00_0**	60"
32"	**FW11C303266-00_0**	66"
32"	**FW11C303272-00_0**	72"
32"	**FW11C303278-00_0**	78"
32"	**FW11C303284-00_0**	84"
32"	**FW11C303290-00_0**	90"
32"	**FW11C303296-00_0**	96"

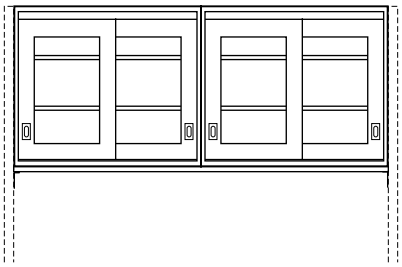

Single-sided Wood Cabinets

Depth	Wood Cabinet	Length
12"	**FW11W301254-00_0**	54"
12"	**FW11W301260-00_0**	60"
12"	**FW11W301266-00_0**	66"
12"	**FW11W301272-00_0**	72"
12"	**FW11W301278-00_0**	78"
12"	**FW11W301284-00_0**	84"
12"	**FW11W301290-00_0**	90"
12"	**FW11W301296-00_0**	96"
16"	**FW11W301654-00_0**	54"
16"	**FW11W301660-00_0**	60"
16"	**FW11W301666-00_0**	66"
16"	**FW11W301672-00_0**	72"
16"	**FW11W301678-00_0**	78"
16"	**FW11W301684-00_0**	84"
16"	**FW11W301690-00_0**	90"
16"	**FW11W301696-00_0**	96"

Double-sided Wood Cabinets

Depth	Wood Cabinet	Length
24"	**FW11W302454-00_0**	54"
24"	**FW11W302460-00_0**	60"
24"	**FW11W302466-00_0**	66"
24"	**FW11W302472-00_0**	72"
24"	**FW11W302478-00_0**	78"
24"	**FW11W302484-00_0**	84"
24"	**FW11W302490-00_0**	90"
24"	**FW11W302496-00_0**	96"
32"	**FW11W303254-00_0**	54"
32"	**FW11W303260-00_0**	60"
32"	**FW11W303266-00_0**	66"
32"	**FW11W303272-00_0**	72"
32"	**FW11W303278-00_0**	78"
32"	**FW11W303284-00_0**	84"
32"	**FW11W303290-00_0**	90"
32"	**FW11W303296-00_0**	96"

Illustrations and specifications are based on most current design and production information available. Kewaunee reserves the right to make changes at any time without notice.

Upper Storage Cabinets

Upper Storage Cabinets are used in place of open shelving when enclosed storage and/or resistance to dust is required. Cabinets are available in powder coated steel or hardwood veneer plywood construction, and in a variety of door styles. All Evolution upper cabinets are 30" high and include two adjustable shelves. Double-sided cabinets use two single-sided cabinets mounted back-to-back on a single support assembly. Cabinets mount between columns and include support assembly and mounting hardware.

Note: Last four digits of part number designates cabinet/door style and hardward selection. See page 48 for full explanation. Actual product may vary slightly from catalog illustration due to style and hardware selection.

Sliding Panel Door Cabinets

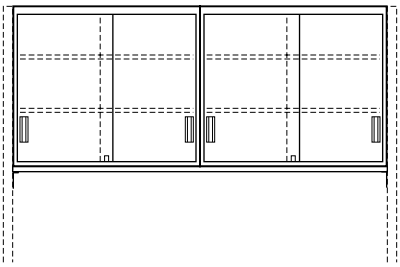

Single-sided Steel Cabinets

Depth	Steel Cabinet	Length
12¾"	**FW12C301354-00_0**	54"
12¾"	**FW12C301360-00_0**	60"
12¾"	**FW12C301366-00_0**	66"
12¾"	**FW12C301372-00_0**	72"
12¾"	**FW12C301378-00_0**	78"
12¾"	**FW12C301384-00_0**	84"
12¾"	**FW12C301390-00_0**	90"
12¾"	**FW12C301396-00_0**	96"
16"	**FW12C301654-00_0**	54"
16"	**FW12C301660-00_0**	60"
16"	**FW12C301666-00_0**	66"
16"	**FW12C301672-00_0**	72"
16"	**FW12C301678-00_0**	78"
16"	**FW12C301684-00_0**	84"
16"	**FW12C301690-00_0**	90"
16"	**FW12C301696-00_0**	96"

Double-sided Steel Cabinets

Depth	Steel Cabinet	Length
25½"	**FW12C302654-00_0**	54"
25½"	**FW12C302660-00_0**	60"
25½"	**FW12C302666-00_0**	66"
25½"	**FW12C302672-00_0**	72"
25½"	**FW12C302678-00_0**	78"
25½"	**FW12C302684-00_0**	84"
25½"	**FW12C302690-00_0**	90"
25½"	**FW12C302696-00_0**	96"
32"	**FW12C303254-00_0**	54"
32"	**FW12C303260-00_0**	60"
32"	**FW12C303266-00_0**	66"
32"	**FW12C303272-00_0**	72"
32"	**FW12C303278-00_0**	78"
32"	**FW12C303284-00_0**	84"
32"	**FW12C303290-00_0**	90"
32"	**FW12C303296-00_0**	96"

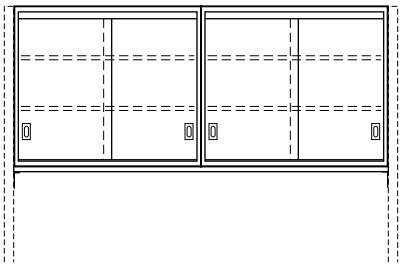

Single-sided Wood Cabinets

Depth	Wood Cabinet	Length
12"	**FW12W301254-00_0**	54"
12"	**FW12W301260-00_0**	60"
12"	**FW12W301266-00_0**	66"
12"	**FW12W301272-00_0**	72"
12"	**FW12W301278-00_0**	78"
12"	**FW12W301284-00_0**	84"
12"	**FW12W301290-00_0**	90"
12"	**FW12W301296-00_0**	96"
16"	**FW12W301654-00_0**	54"
16"	**FW12W301660-00_0**	60"
16"	**FW12W301666-00_0**	66"
16"	**FW12W301672-00_0**	72"
16"	**FW12W301678-00_0**	78"
16"	**FW12W301684-00_0**	84"
16"	**FW12W301690-00_0**	90"
16"	**FW12W301696-00_0**	96"

Double-sided Wood Cabinets

Depth	Wood Cabinet	Length
24"	**FW24W302454-00_0**	54"
24"	**FW24W302460-00_0**	60"
24"	**FW24W302466-00_0**	66"
24"	**FW24W302472-00_0**	72"
24"	**FW24W302478-00_0**	78"
24"	**FW24W302484-00_0**	84"
24"	**FW24W302490-00_0**	90"
24"	**FW24W302496-00_0**	96"
32"	**FW12W303254-00_0**	54"
32"	**FW12W303260-00_0**	60"
32"	**FW12W303266-00_0**	66"
32"	**FW12W303272-00_0**	72"
32"	**FW12W303278-00_0**	78"
32"	**FW12W303284-00_0**	84"
32"	**FW12W303290-00_0**	90"
32"	**FW12W303296-00_0**	96"

Illustrations and specifications are based on most current design and production information available. Kewaunee reserves the right to make changes at any time without notice.

KEWAUNEE Scientific Corporation

Upper Storage Cabinets

Upper Storage Cabinets are used in place of open shelving when enclosed storage and/or resistance to dust is required. Cabinets are available in powder coated steel or hardwood veneer plywood construction, and in a variety of door styles. All Evolution upper cabinets are 30" high and include two adjustable shelves. Double-sided cabinets use two single-sided cabinets mounted back-to-back on a single support assembly. Cabinets mount between columns and include support assembly and mounting hardware.

Note: Last four digits of part number designates cabinet/door style and hardward selection. See page 48 for full explanation. Actual product may vary slightly from catalog illustration due to style and hardware selection.

Swinging Glazed Door Cabinets

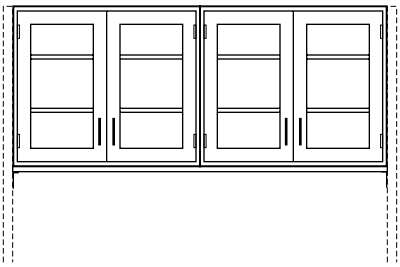

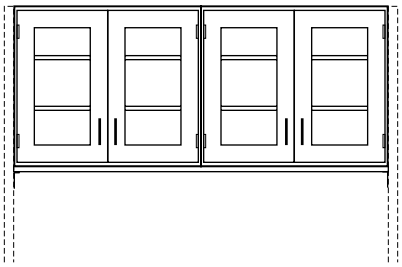

Single-sided Steel Cabinets

Depth	Steel Cabinet	Length
12¾"	**FW20C301354-00_0**	54"
12¾"	**FW20C301360-00_0**	60"
12¾"	**FW20C301366-00_0**	66"
12¾"	**FW20C301372-00_0**	72"
12¾"	**FW20C301378-00_0**	78"
12¾"	**FW20C301384-00_0**	84"
12¾"	**FW20C301390-00_0**	90"
12¾"	**FW20C301396-00_0**	96"
16"	**FW20C301654-00_0**	54"
16"	**FW20C301660-00_0**	60"
16"	**FW20C301666-00_0**	66"
16"	**FW20C301672-00_0**	72"
16"	**FW20C301678-00_0**	78"
16"	**FW20C301684-00_0**	84"
16"	**FW20C301690-00_0**	90"
16"	**FW20C301696-00_0**	96"

Single-sided Wood Cabinets

Depth	Wood Cabinet	Length
12"	**FW20W301254-00_0**	54"
12"	**FW20W301260-00_0**	60"
12"	**FW20W301266-00_0**	66"
12"	**FW20W301272-00_0**	72"
12"	**FW20W301278-00_0**	78"
12"	**FW20W301284-00_0**	84"
12"	**FW20W301290-00_0**	90"
12"	**FW20W301296-00_0**	96"
16"	**FW20W301654-00_0**	54"
16"	**FW20W301660-00_0**	60"
16"	**FW20W301666-00_0**	66"
16"	**FW20W301672-00_0**	72"
16"	**FW20W301678-00_0**	78"
16"	**FW20W301684-00_0**	84"
16"	**FW20W301690-00_0**	90"
16"	**FW20W301696-00_0**	96"

Double-sided Steel Cabinets

Depth	Steel Cabinet	Length
25½"	**FW20C302654-00_0**	54"
25½"	**FW20C302660-00_0**	60"
25½"	**FW20C302666-00_0**	66"
25½"	**FW20C302672-00_0**	72"
25½"	**FW20C302678-00_0**	78"
25½"	**FW20C302684-00_0**	84"
25½"	**FW20C302690-00_0**	90"
25½"	**FW20C302696-00_0**	96"
32"	**FW20C303254-00_0**	54"
32"	**FW20C303260-00_0**	60"
32"	**FW20C303266-00_0**	66"
32"	**FW20C303272-00_0**	72"
32"	**FW20C303278-00_0**	78"
32"	**FW20C303284-00_0**	84"
32"	**FW20C303290-00_0**	90"
32"	**FW20C303296-00_0**	96"

Double-sided Wood Cabinets

Depth	Wood Cabinet	Length
24"	**FW20W302454-00_0**	54"
24"	**FW20W302460-00_0**	60"
24"	**FW20W302466-00_0**	66"
24"	**FW20W302472-00_0**	72"
24"	**FW20W302478-00_0**	78"
24"	**FW20W302484-00_0**	84"
24"	**FW20W302490-00_0**	90"
24"	**FW20W302496-00_0**	96"
32"	**FW20W303254-00_0**	54"
32"	**FW20W303260-00_0**	60"
32"	**FW20W303266-00_0**	66"
32"	**FW20W303272-00_0**	72"
32"	**FW20W303278-00_0**	78"
32"	**FW20W303284-00_0**	84"
32"	**FW20W303290-00_0**	90"
32"	**FW20W303296-00_0**	96"

Illustrations and specifications are based on most current design and production information available. Kewaunee reserves the right to make changes at any time without notice.

Upper Storage Cabinets

Upper Storage Cabinets are used in place of open shelving when enclosed storage and/or resistance to dust is required. Cabinets are available in powder coated steel or hardwood veneer plywood construction, and in a variety of door styles. All Evolution upper cabinets are 30" high and include two adjustable shelves. Double-sided cabinets use two single-sided cabinets mounted back-to-back on a single support assembly. Cabinets mount between columns and include support assembly and mounting hardware.

Note: Last four digits of part number designates cabinet/door style and hardward selection. See page 48 for full explanation. Actual product may vary slightly from catalog illustration due to style and hardware selection.

Swinging Panel Door Cabinets

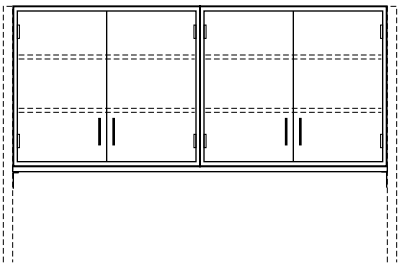

Single-sided Steel Cabinets

Depth	Steel Cabinet	Length
12¾"	**FW25C301354-00_0**	54"
12¾"	**FW25C301360-00_0**	60"
12¾"	**FW25C301366-00_0**	66"
12¾"	**FW25C301372-00_0**	72"
12¾"	**FW25C301378-00_0**	78"
12¾"	**FW25C301384-00_0**	84"
12¾"	**FW25C301390-00_0**	90"
12¾"	**FW25C301396-00_0**	96"
16"	**FW25C301654-00_0**	54"
16"	**FW25C301660-00_0**	60"
16"	**FW25C301666-00_0**	66"
16"	**FW25C301672-00_0**	72"
16"	**FW25C301678-00_0**	78"
16"	**FW25C301684-00_0**	84"
16"	**FW25C301690-00_0**	90"
16"	**FW25C301696-00_0**	96"

Double-sided Steel Cabinets

Depth	Steel Cabinet	Length
25½"	**FW25C302654-00_0**	54"
25½"	**FW25C302660-00_0**	60"
25½"	**FW25C302666-00_0**	66"
25½"	**FW25C302672-00_0**	72"
25½"	**FW25C302678-00_0**	78"
25½"	**FW25C302684-00_0**	84"
25½"	**FW25C302690-00_0**	90"
25½"	**FW25C302696-00_0**	96"
32"	**FW25C303254-00_0**	54"
32"	**FW25C303260-00_0**	60"
32"	**FW25C303266-00_0**	66"
32"	**FW25C303272-00_0**	72"
32"	**FW25C303278-00_0**	78"
32"	**FW25C303284-00_0**	84"
32"	**FW25C303290-00_0**	90"
32"	**FW25C303296-00_0**	96"

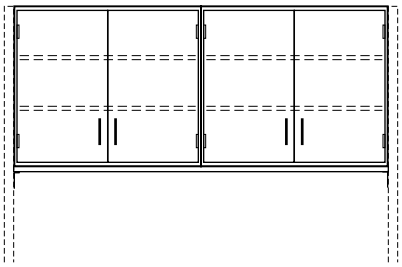

Single-sided Wood Cabinets

Depth	Wood Cabinet	Length
12"	**FW25W301254-00_0**	54"
12"	**FW25W301260-00_0**	60"
12"	**FW25W301266-00_0**	66"
12"	**FW25W301272-00_0**	72"
12"	**FW25W301278-00_0**	78"
12"	**FW25W301284-00_0**	84"
12"	**FW25W301290-00_0**	90"
12"	**FW25W301296-00_0**	96"
16"	**FW25W301654-00_0**	54"
16"	**FW25W301660-00_0**	60"
16"	**FW25W301666-00_0**	66"
16"	**FW25W301672-00_0**	72"
16"	**FW25W301678-00_0**	78"
16"	**FW25W301684-00_0**	84"
16"	**FW25W301690-00_0**	90"
16"	**FW25W301696-00_0**	96"

Double-sided Wood Cabinets

Depth	Wood Cabinet	Length
24"	**FW25W302454-00_0**	54"
24"	**FW25W302460-00_0**	60"
24"	**FW25W302466-00_0**	66"
24"	**FW25W302472-00_0**	72"
24"	**FW25W302478-00_0**	78"
24"	**FW25W302484-00_0**	84"
24"	**FW25W302490-00_0**	90"
24"	**FW25W302496-00_0**	96"
32"	**FW25W303254-00_0**	54"
32"	**FW25W303260-00_0**	60"
32"	**FW25W303266-00_0**	66"
32"	**FW25W303272-00_0**	72"
32"	**FW25W303278-00_0**	78"
32"	**FW25W303284-00_0**	84"
32"	**FW25W303290-00_0**	90"
32"	**FW25W303296-00_0**	96"

Illustrations and specifications are based on most current design and production information available. Kewaunee reserves the right to make changes at any time without notice.

KEWAUNEE Scientific Corporation

Pass-thru Upper Storage Cabinets

Sliding Plate Glass Door Cabinets

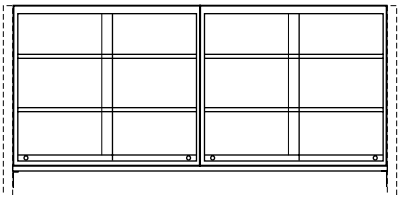

Depth	Steel Cabinet	Length
16"	**FW13C301654-00_0**	54"
16"	**FW13C301660-00_0**	60"
16"	**FW13C301666-00_0**	66"
16"	**FW13C301672-00_0**	72"
16"	**FW13C301678-00_0**	78"
16"	**FW13C301684-00_0**	84"
16"	**FW13C301690-00_0**	90"
16"	**FW13C301696-00_0**	96"
22"	**FW13C302254-00_0**	54"
22"	**FW13C302260-00_0**	60"
22"	**FW13C302266-00_0**	66"
22"	**FW13C302272-00_0**	72"
22"	**FW13C302278-00_0**	78"
22"	**FW13C302284-00_0**	84"
22"	**FW13C302290-00_0**	90"
22"	**FW13C302296-00_0**	96"

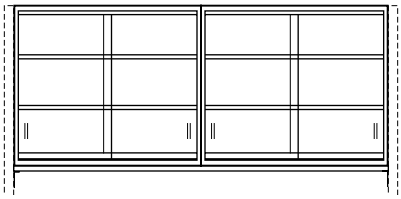

Depth	Wood Cabinet	Length
16"	**FW13W301654-00_0**	54"
16"	**FW13W301660-00_0**	60"
16"	**FW13W301666-00_0**	66"
16"	**FW13W301672-00_0**	72"
16"	**FW13W301678-00_0**	78"
16"	**FW13W301684-00_0**	84"
16"	**FW13W301690-00_0**	90"
16"	**FW13W301696-00_0**	96"
22"	**FW13W302254-00_0**	54"
22"	**FW13W302260-00_0**	60"
22"	**FW13W302266-00_0**	66"
22"	**FW13W302272-00_0**	72"
22"	**FW13W302278-00_0**	78"
22"	**FW13W302284-00_0**	84"
22"	**FW13W302290-00_0**	90"
22"	**FW13W302296-00_0**	96"

Illustrations and specifications are based on most current design and production information available. Kewaunee reserves the right to make changes at any time without notice.

Pass-thru Upper Storage Cabinets

Pass-thru Upper Storage Cabinets are used in place of open shelving when enclosed storage and/or resistance to dust is required. Cabinets are available in powder coated steel or hardwood veneer plywood construction, and in a variety ofdoor styles. All Evolution upper cabinets are 30" high and include two adjustable shelves. Cabinets mount between columns and include support assembly and mounting hardware.

Note: Last four digits of part number designates cabinet/door style and hardward selection. See page 48 for full explanation. Actual product may vary slightly from catalog illustration due to style and hardware selection.

Sliding Glazed Door Cabinets

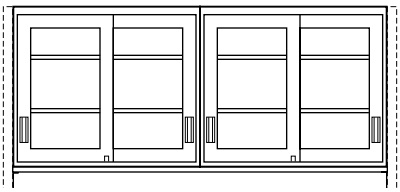

Depth	Steel Cabinet	Length
16"	**FW14C301654-00_0**	54"
16"	**FW14C301660-00_0**	60"
16"	**FW14C301666-00_0**	66"
16"	**FW14C301672-00_0**	72"
16"	**FW14C301678-00_0**	78"
16"	**FW14C301684-00_0**	84"
16"	**FW14C301690-00_0**	90"
16"	**FW14C301696-00_0**	96"
22"	**FW14C302254-00_0**	54"
22"	**FW14C302260-00_0**	60"
22"	**FW14C302266-00_0**	66"
22"	**FW14C302272-00_0**	72"
22"	**FW14C302278-00_0**	78"
22"	**FW14C302284-00_0**	84"
22"	**FW14C302290-00_0**	90"
22"	**FW14C302296-00_0**	96"

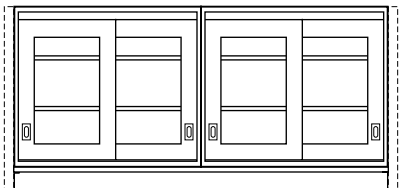

Depth	Wood Cabinet	Length
16"	**FW14W301654-00_0**	54"
16"	**FW14W301660-00_0**	60"
16"	**FW14W301666-00_0**	66"
16"	**FW14W301672-00_0**	72"
16"	**FW14W301678-00_0**	78"
16"	**FW14W301684-00_0**	84"
16"	**FW14W301690-00_0**	90"
16"	**FW14W301696-00_0**	96"
22"	**FW14W302254-00_0**	54"
22"	**FW14W302260-00_0**	60"
22"	**FW14W302266-00_0**	66"
22"	**FW14W302272-00_0**	72"
22"	**FW14W302278-00_0**	78"
22"	**FW14W302284-00_0**	84"
22"	**FW14W302290-00_0**	90"
22"	**FW14W302296-00_0**	96"

Sliding Panel Door Cabinets

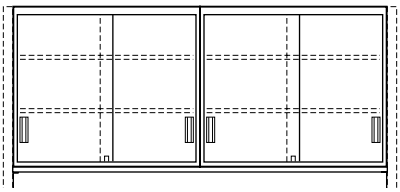

Depth	Steel Cabinet	Length
16"	**FW15C301654-00_0**	54"
16"	**FW15C301660-00_0**	60"
16"	**FW15C301666-00_0**	66"
16"	**FW15C301672-00_0**	72"
16"	**FW15C301678-00_0**	78"
16"	**FW15C301684-00_0**	84"
16"	**FW15C301690-00_0**	90"
16"	**FW15C301696-00_0**	96"
22"	**FW15C302254-00_0**	54"
22"	**FW15C302260-00_0**	60"
22"	**FW15C302266-00_0**	66"
22"	**FW15C302272-00_0**	72"
22"	**FW15C302278-00_0**	78"
22"	**FW15C302284-00_0**	84"
22"	**FW15C302290-00_0**	90"
22"	**FW15C302296-00_0**	96"

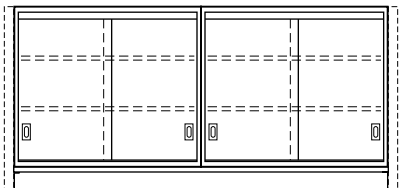

Depth	Wood Cabinet	Length
16"	**FW15W301654-00_0**	54"
16"	**FW15W301660-00_0**	60"
16"	**FW15W301666-00_0**	66"
16"	**FW15W301672-00_0**	72"
16"	**FW15W301678-00_0**	78"
16"	**FW15W301684-00_0**	84"
16"	**FW15W301690-00_0**	90"
16"	**FW15W301696-00_0**	96"
22"	**FW15W302254-00_0**	54"
22"	**FW15W302260-00_0**	60"
22"	**FW15W302266-00_0**	66"
22"	**FW15W302272-00_0**	72"
22"	**FW15W302278-00_0**	78"
22"	**FW15W302284-00_0**	84"
22"	**FW15W302290-00_0**	90"
22"	**FW15W302296-00_0**	96"

Illustrations and specifications are based on most current design and production information available. Kewaunee reserves the right to make changes at any time without notice.

KEWAUNEE Scientific Corporation

Pass-thru Upper Storage Cabinets

Pass-thru Upper Storage Cabinets are used in place of open shelving when enclosed storage and/or resistance to dust is required. Cabinets are available in powder coated steel or hardwood veneer plywood construction, and in a variety ofdoor styles. All Evolution upper cabinets are 30" high and include two adjustable shelves. Cabinets mount between columns and include support assembly and mounting hardware.

Note: Last four digits of part number designates cabinet/door style and hardward selection. See page 48 for full explanation. Actual product may vary slightly from catalog illustration due to style and hardware selection.

Swinging Glazed Door Cabinets

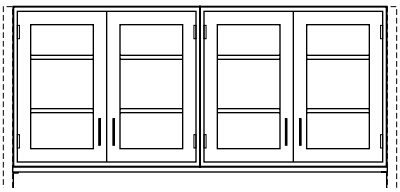

Depth	Steel Cabinet	Length
16"	**FW23C301654-00_0**	54"
16"	**FW23C301660-00_0**	60"
16"	**FW23C301666-00_0**	66"
16"	**FW23C301672-00_0**	72"
16"	**FW23C301678-00_0**	78"
16"	**FW23C301684-00_0**	84"
16"	**FW23C301690-00_0**	90"
16"	**FW23C301696-00_0**	96"
22"	**FW23C302254-00_0**	54"
22"	**FW23C302260-00_0**	60"
22"	**FW23C302266-00_0**	66"
22"	**FW23C302272-00_0**	72"
22"	**FW23C302278-00_0**	78"
22"	**FW23C302284-00_0**	84"
22"	**FW23C302290-00_0**	90"
22"	**FW23C302296-00_0**	96"

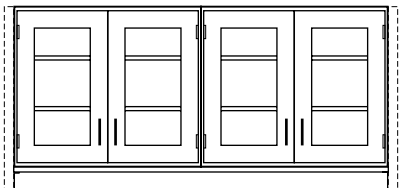

Depth	Wood Cabinet	Length
16"	**FW23W301654-00_0**	54"
16"	**FW23W301660-00_0**	60"
16"	**FW23W301666-00_0**	66"
16"	**FW23W301672-00_0**	72"
16"	**FW23W301678-00_0**	78"
16"	**FW23W301684-00_0**	84"
16"	**FW23W301690-00_0**	90"
16"	**FW23W301696-00_0**	96"
22"	**FW23W302254-00_0**	54"
22"	**FW23W302260-00_0**	60"
22"	**FW23W302266-00_0**	66"
22"	**FW23W302272-00_0**	72"
22"	**FW23W302278-00_0**	78"
22"	**FW23W302284-00_0**	84"
22"	**FW23W302290-00_0**	90"
22"	**FW23W302296-00_0**	96"

Swinging Panel Door Cabinets

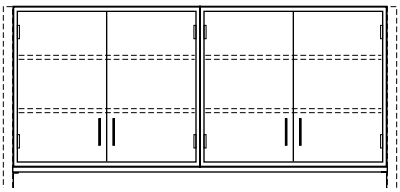

Depth	Steel Cabinet	Length
16"	**FW28C301654-00_0**	54"
16"	**FW28C301660-00_0**	60"
16"	**FW28C301666-00_0**	66"
16"	**FW28C301672-00_0**	72"
16"	**FW28C301678-00_0**	78"
16"	**FW28C301684-00_0**	84"
16"	**FW28C301690-00_0**	90"
16"	**FW28C301696-00_0**	96"
22"	**FW28C302254-00_0**	54"
22"	**FW28C302260-00_0**	60"
22"	**FW28C302266-00_0**	66"
22"	**FW28C302272-00_0**	72"
22"	**FW28C302278-00_0**	78"
22"	**FW28C302284-00_0**	84"
22"	**FW28C302290-00_0**	90"
22"	**FW28C302296-00_0**	96"

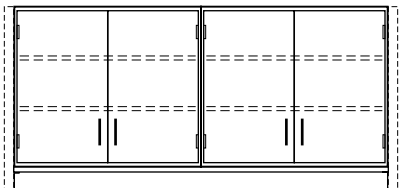

Depth	Wood Cabinet	Length
16"	**FW28W301654-00_0**	54"
16"	**FW28W301660-00_0**	60"
16"	**FW28W301666-00_0**	66"
16"	**FW28W301672-00_0**	72"
16"	**FW28W301678-00_0**	78"
16"	**FW28W301684-00_0**	84"
16"	**FW28W301690-00_0**	90"
16"	**FW28W301696-00_0**	96"
22"	**FW28W302254-00_0**	54"
22"	**FW28W302260-00_0**	60"
22"	**FW28W302266-00_0**	66"
22"	**FW28W302272-00_0**	72"
22"	**FW28W302278-00_0**	78"
22"	**FW28W302284-00_0**	84"
22"	**FW28W302290-00_0**	90"
22"	**FW28W302296-00_0**	96"

Illustrations and specifications are based on most current design and production information available. Kewaunee reserves the right to make changes at any time without notice.

Ceiling Service Panel

Features:

- Designed to integrate into common ceiling grids for delivering plumbing, electrical, and data services to the lab bench
- Fits in standard 2' x 2' and 2' x 4' ceiling grids
- Electrical devices are UL listed.
- Available in all standard powder coat finish colors
- May be customized to meet your project requirements
- Accommodates multiple lab services including:
  - Common gases, air, vacuum, and water
  - High purity and special gases
  - Power and data
- Accepts multiple fitting options including:
  - Standard or fine control valves
  - Pressure gauges and regulators
  - Quick-connect fittings
  - Communication and data outlets
  - Electrical service outlets

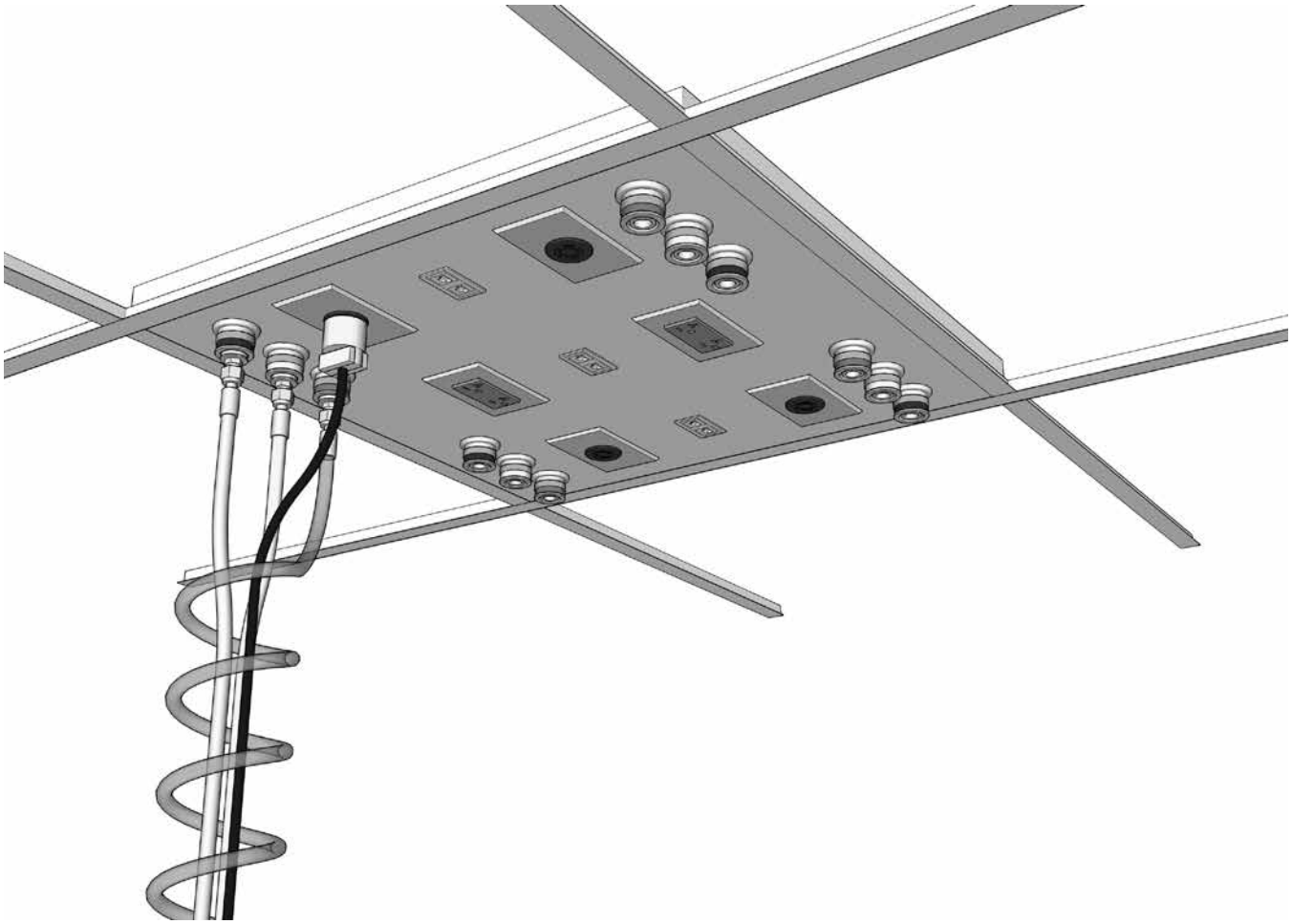

Illustrations and specifications are based on most current design and production information available. Kewaunee reserves the right to make changes at any time without notice.

KEWAUNEE Scientific Corporation

Ceiling Service Panel

Typical Ceiling Panel Layouts

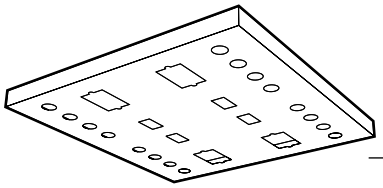

Six Station – 2' x 4' panel
Six groups of 4 service cutouts
Six power receptacle cutouts
Four data outlet cutouts

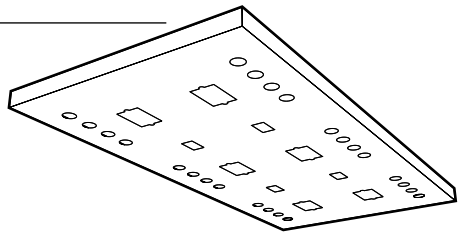

Four Station – 2' x 2' panel
Four groups of 4 service cutouts
Four power receptacle cutouts
Four data outlet cutouts

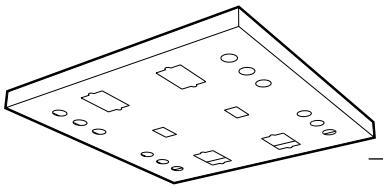

Four Station – 2' x 4' panel
Four groups of 6 service cutouts
Four power receptacle cutouts
Four data outlet cutouts

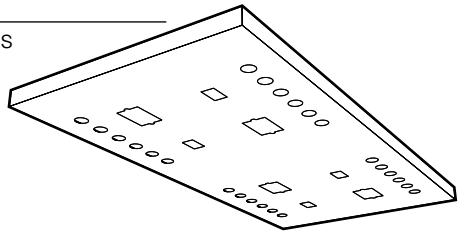

Four Station – 2' x 2' panel
Four groups of 3 service cutouts
Four power receptacle cutouts
Two data outlet cutouts

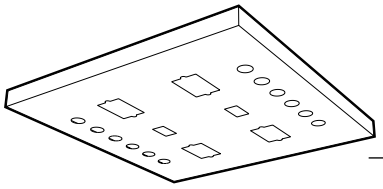

Four Station – 2' x 4' panel
Four groups of 4 service cutouts
Four power receptacle cutouts
Four data outlet cutouts

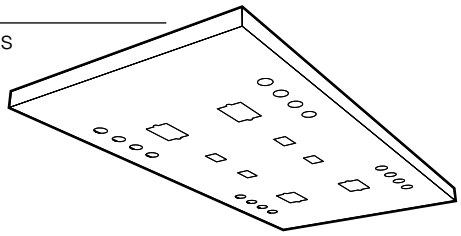

Two Station – 2' x 2' panel
Two groups of 6 service cutouts
Four power receptacle cutouts
Two data outlet cutouts

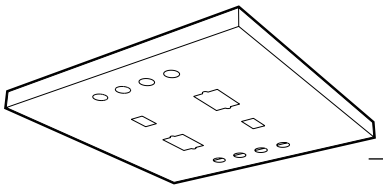

Two Station – 2' x 4' panel
Two groups of 6 service cutouts
Four power receptacle cutouts
Four data outlet cutouts

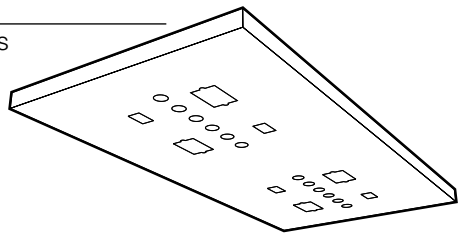

Two Station – 2' x 2' panel
Two groups of 4 service cutouts
Two power receptacle cutouts
Two data outlet cutouts

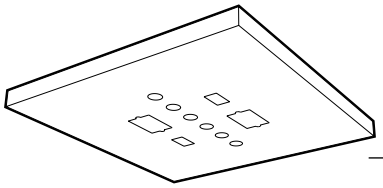

Two Station – 2' x 4' panel
Two groups of 4 service cutouts
Two power receptacle cutouts
Two data outlet cutouts

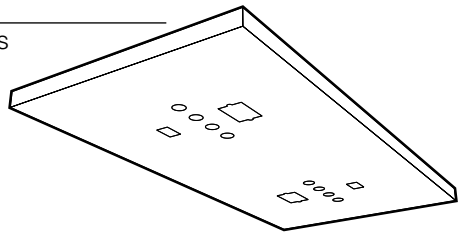

One Station – 2' x 2' panel
One group of 6 service cutouts
One power receptacle cutout
One data outlet cutout

Illustrations and specifications are based on most current design and production information available. Kewaunee reserves the right to make changes at any time without notice.

Ceiling Service Panel Accessories

Ceiling Service Panels are fabricated from powder coat 12 gauge steel in two sizes to fit standard ceiling grid. They can be punched to accept most electrical, data, or service fittings. **Fittings and Fixtures must be ordered separately**

Electrical Fixtures are furnished complete with device, box and cover plate and are supplied loose, uninstalled.

Power Cords are required to carry power from the overhead service carriers to the support frame. The SJ 12/3 and SJ 12/4 cords are available in various configurations.

24" x 24" Ceiling Service Panel

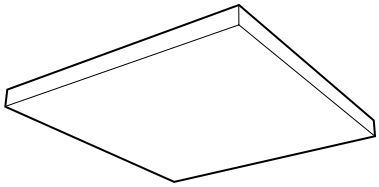

Part Number	Dimensions (HxDxL)
SC10M022424-00	1½" x 24" x 24"

24" x 48" Ceiling Service Panel

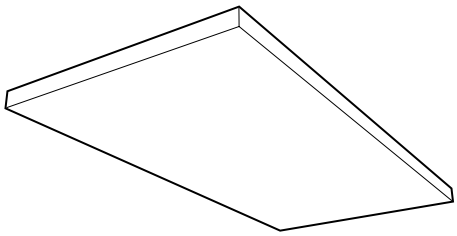

Part Number	Dimensions (HxDxL)
SC10M022448-00	1½" x 24" x 48"

Electrical Fixtures

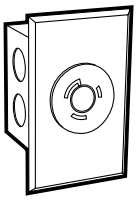

Twist-lock
Single-circuit 20 amp

0620-1K Black

NEMA L5-20 3-wire, specification grade, 120 VAC, 20 amp, single receptacle.

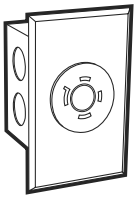

Dual-circuit
Twist-lock 20 amp

0624-1K Black

NEMA L14-20 4-wire, specification grade receptacle. Capable of carrying two 120 VAC, 20 amp circuits.
Note: Check local electrical codes for compliance.

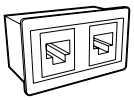

RJ45 8P8C
Data/Comm Outlet

0720-0K-6	Cat-6	Black
0720-0V-6	Cat-6	Ivory
0720-0K-6a	Cat-6a	Black
0720-0V-6a	Cat-6a	Ivory

(2) RJ45 8P8C Outlets
Fits in 1¼" x 2" cutout.

Power Cords

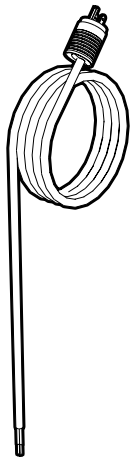

Single-circuit 3-wire

120 VAC — 20A — NEMA L5-20

Part Number	Length	Plug Type
W-5622-36	36"ATOP	Twist-Lock
W-5622-48	48"ATOP	Twist-Lock
W-5622-60	60"ATOP	Twist-Lock
W-5622-72	72"ATOP	Twist-Lock
W-5622-96	96"ATOP	Twist-Lock

Dual-circuit 4-wire

120 VAC — 20A — NEMA L14-20

Part Number	Length	Plug Type
W-5624-36	36"ATOP	Twist-Lock
W-5624-48	48"ATOP	Twist-Lock
W-5624-60	60"ATOP	Twist-Lock
W-5624-72	72"ATOP	Twist-Lock
W-5624-96	96"ATOP	Twist-Lock

Illustrations and specifications are based on most current design and production information available. Kewaunee reserves the right to make changes at any time without notice.

KEWAUNEE Scientific Corporation

Ceiling Service Panel Accessories

Service Hoses are required to carry services from overhead service panel to the workstation column. They are available in reinforced PVC, polyurethane, or braided stainless steel. PVC hoses are available in 9 colors to match quick-connect color codes.

Specifiy PVC hose color by placing color code at end of hose part number.

Example: W-1133-36-**02** for Orange hose

Keyed Quick-Connect Fittings are available for Hoses to ease service connection and disconnection during bench relocation. They are available in eight sizes (keys) which keeps service outlets from being connected to the wrong service.

Extension Service Hoses

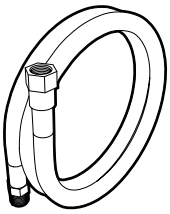

Reinforced PVC Hose

for Non-burning Gases
3/8" IPS Female Inlet
3/8" IPS Male Outlet

Length	Part Number
36"	**W-1133-36-0_**
48"	**W-1133-48-0_**
60"	**W-1133-60-0_**
72"	**W-1133-72-0_**
96"	**W-1133-96-0_**

Braided Stainless Steel Hose

for Natural & Reactive Gases
3/8" IPS Female Inlet
3/8" IPS Male Outlet

Length	Part Number
36"	**W-1233-36-00**
48"	**W-1233-48-00**
60"	**W-1233-60-00**
72"	**W-1233-72-00**
96"	**W-1233-96-00**

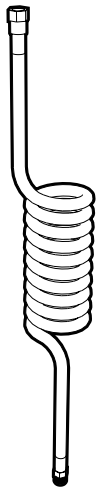

Coiled Polyurethane Hose

for Non-burning Gases
3/8" IPS Female Inlet
3/8" IPS Male Outlet

Length	Part Number
72"	**W-1533-72**

Hose/Cord Wrap

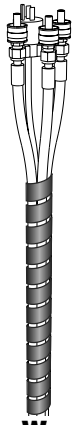

Poly Hose Wrap

Spiral wrap for bundling service lines and cords. Expandable from 1" to 2" diameter. May be trimmed to length with scissors.

L	Part Number	Color
36"	**F-8250-36-BK**	Black
36"	**F-8250-36-NA**	Natural
72"	**F-8250-72-BK**	Black
72"	**F-8250-72-NA**	Natural

Keyed Quick-connect Fittings

for use on Service Hoses

Male Hose Mount

3/8" IPS Male

Part Number	Key Color
W-8111-K1	Black
W-8111-K2	Orange
W-8111-K3	Green
W-8111-K4	Yellow
W-8111-K5	Blue
W-8111-K6	White
W-8111-K7	Purple
W-8111-K8	Brown

for use on Service Hoses

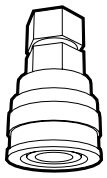

Female Hose Mount

3/8" IPS Female

Part Number	Key Color
W-9112-K1	Black
W-9112-K2	Orange
W-9112-K3	Green
W-9112-K4	Yellow
W-9112-K5	Blue
W-9112-K6	White
W-9112-K7	Purple
W-9112-K8	Brown

for use on Ceiling Service Panels

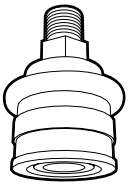

Female Panel Mount

3/8" IPS Male

Part Number	Key Color
W-9122-K1	Black
W-9122-K2	Orange
W-9122-K3	Green
W-9122-K4	Yellow
W-9122-K5	Blue
W-9122-K6	White
W-9122-K7	Purple
W-9122-K8	Brown

Hose Colors

Color Code	Color	Color Code	Color
01	Black	**06**	White
02	Orange	**07**	Purple
03	Green	**08**	Brown
04	Yellow	**09**	Clear
05	Blue		

Keyed Quick-connect Fittings

Key Number and Color Code	Standard Service	Female Body Sleeve Dia.		Male Body Sleeve Dia.	
		in.	mm	in	mm
K1 Black	Helium	1.13	28.7	0.99	25.1
K2 Orange	Air	1.16	29.5	1.02	25.8
K3 Green	Water	1.19	30.2	1.05	26.6
K4 Yellow	Vacuum	1.22	31.0	1.08	27.4
K5 Blue	Gas	1.24	31.5	1.11	28.1
K6 White	—	1.28	32.5	1.14	28.9
K7 Purple	Argon	1.31	33.3	1.17	29.7
K8 Brown	Nitrogen	1.34	34.0	1.20	30.4

Illustrations and specifications are based on most current design and production information available. Kewaunee reserves the right to make changes at any time without notice.

Technical Information

Dimensions – FV10 & FV11 Single-sided 9" Column Workstation on Glides

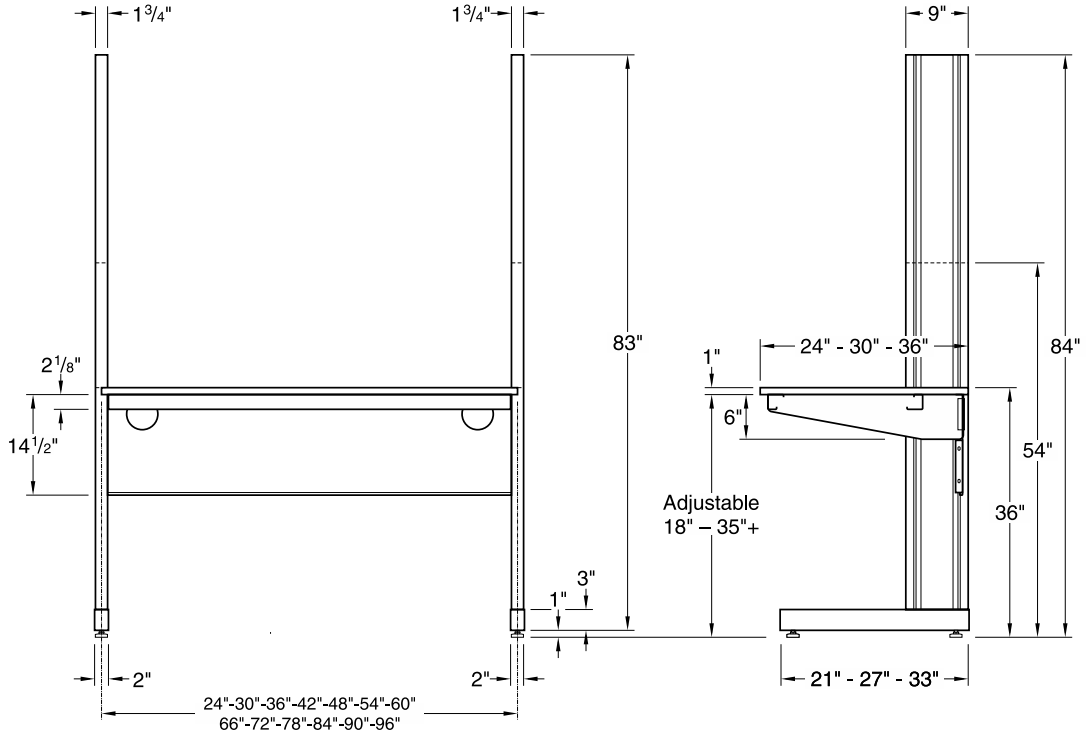

FV10MXXXXXX-00 Front Elevation

FV10MXXXXXX-00 End Elevation

Dimensions – FV10 & FV11 Single-sided 9" Column Workstation Casters

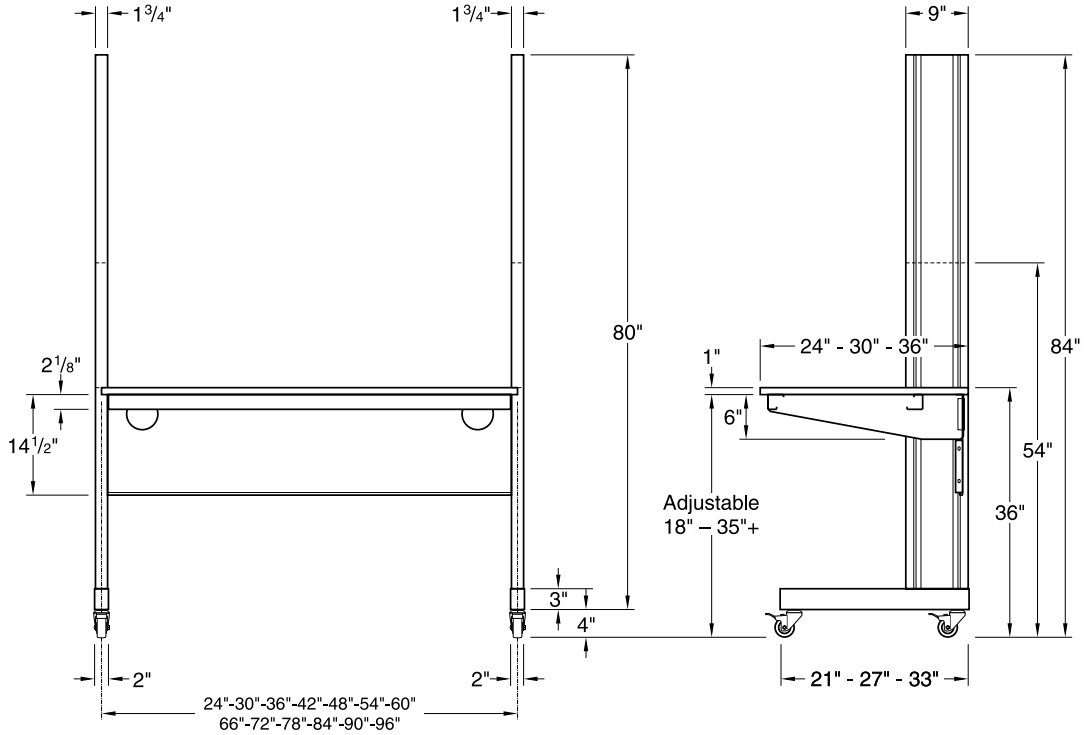

FV10MXXXXXX-01 & 02 Front Elevation

FV10MXXXXXX-01 & 02 End Elevation

Illustrations and specifications are based on most current design and production information available. Kewaunee reserves the right to make changes at any time without notice.

Technical Information

Dimensions – FV30 & FV31 Single-sided 12" Column Workstation on Glides

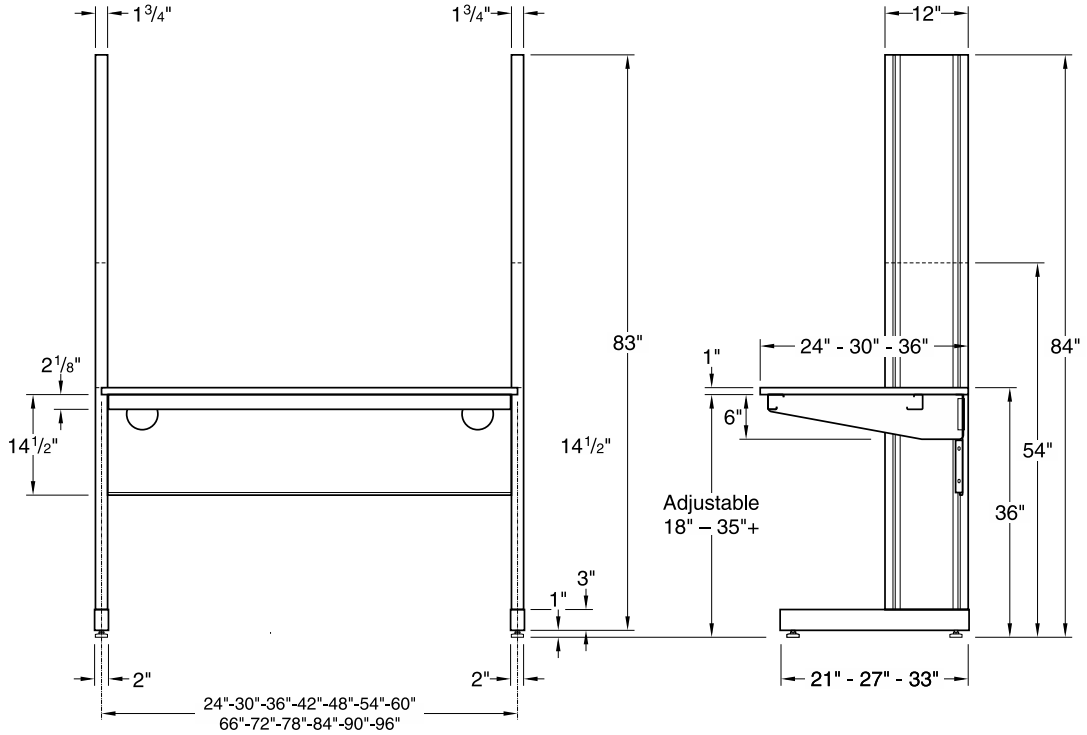

FV30MXXXXXX-00 Front Elevation

FV30MXXXXXX-00 End Elevation

Dimensions – FV30 & FV31 Single-sided 12" Column Workstation Casters

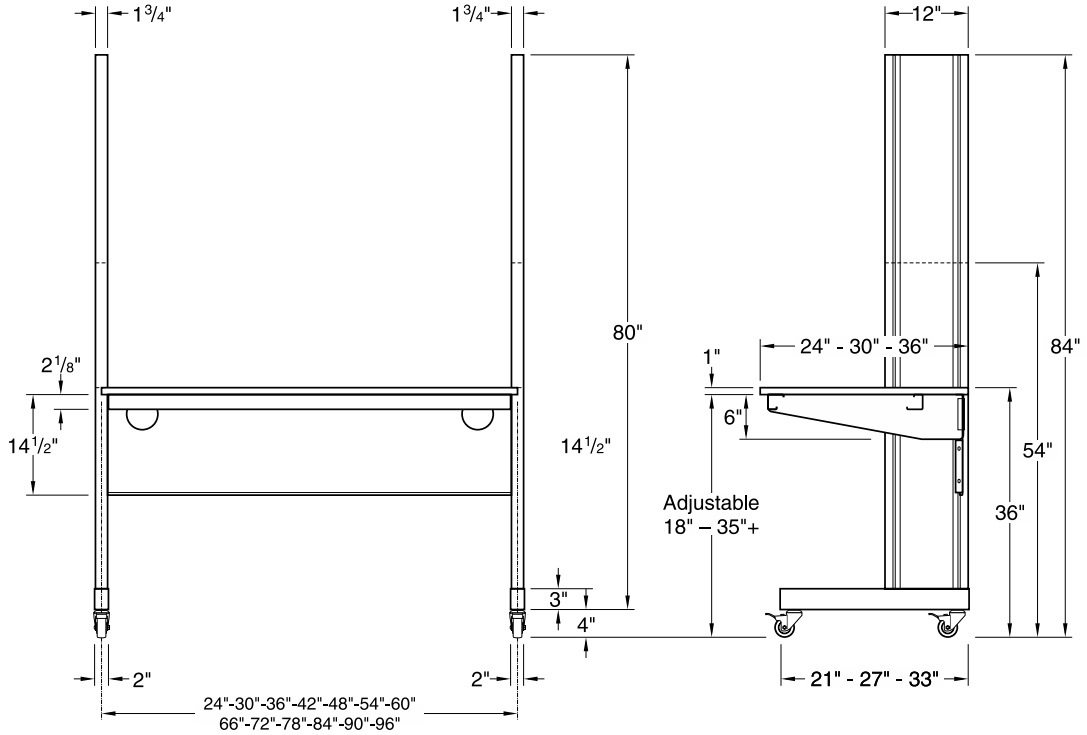

FV30MXXXXXX-01 & 02 Front Elevation

FV30MXXXXXX-01 & 02 End Elevation

Illustrations and specifications are based on most current design and production information available. Kewaunee reserves the right to make changes at any time without notice.

Technical Information

Dimensions – FV20 & FV21 Double-sided 9" Column Workstation on Glides

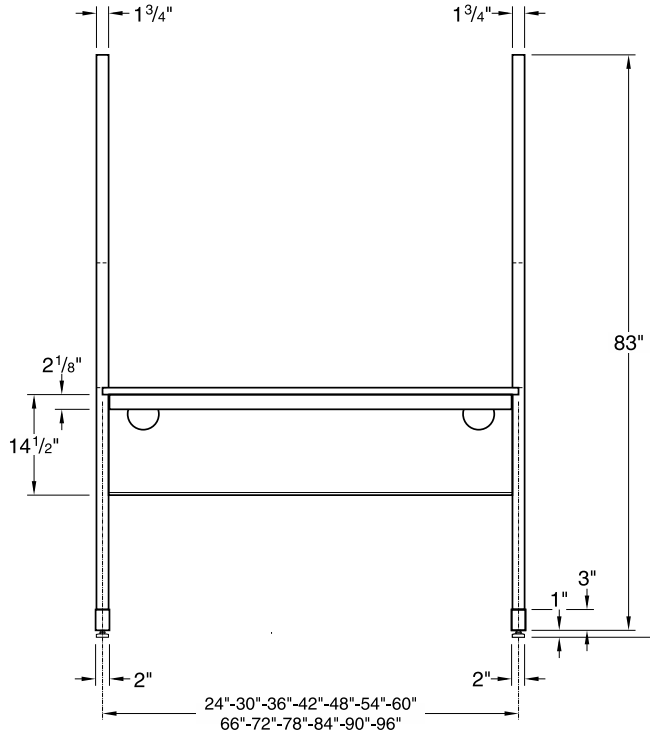

FV20MXXXXXX-00 Front Elevation

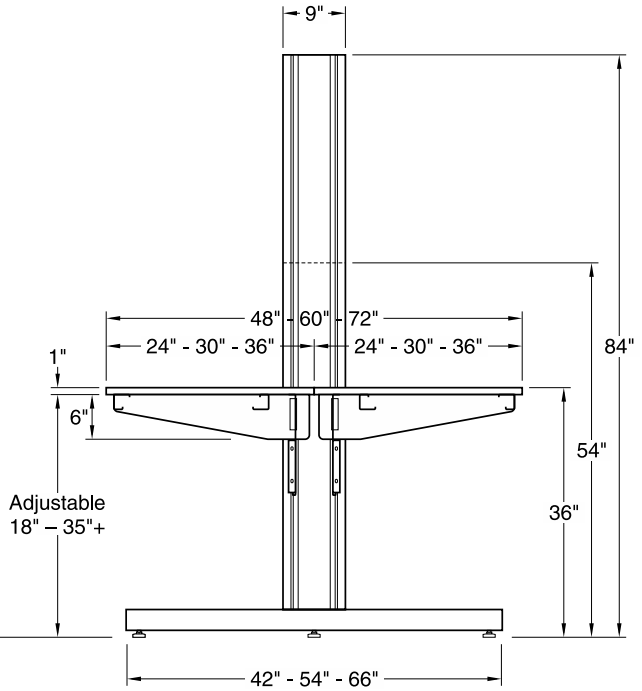

FV20MXXXXXX-00 End Elevation

Dimensions – FV20 & FV21 Double-sided 9" Column Workstation Casters

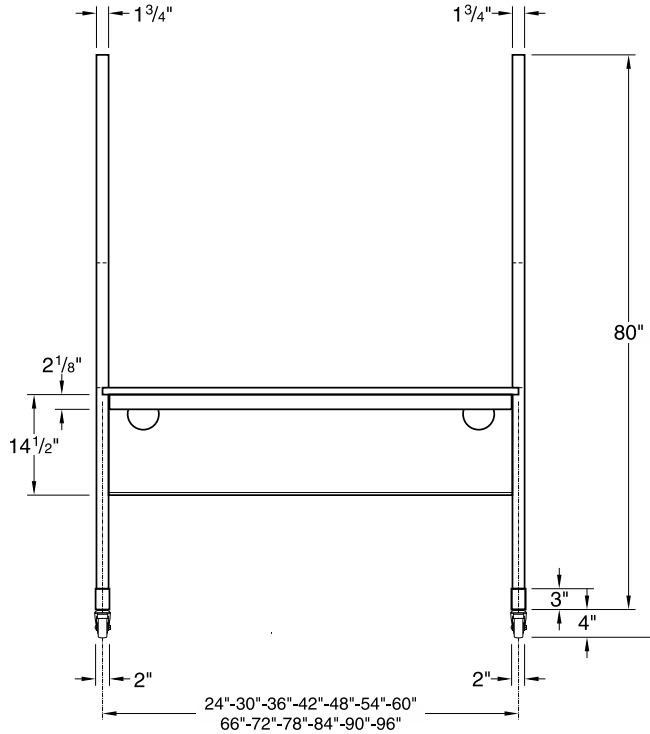

FV20MXXXXXX-01 & 02 Front Elevation

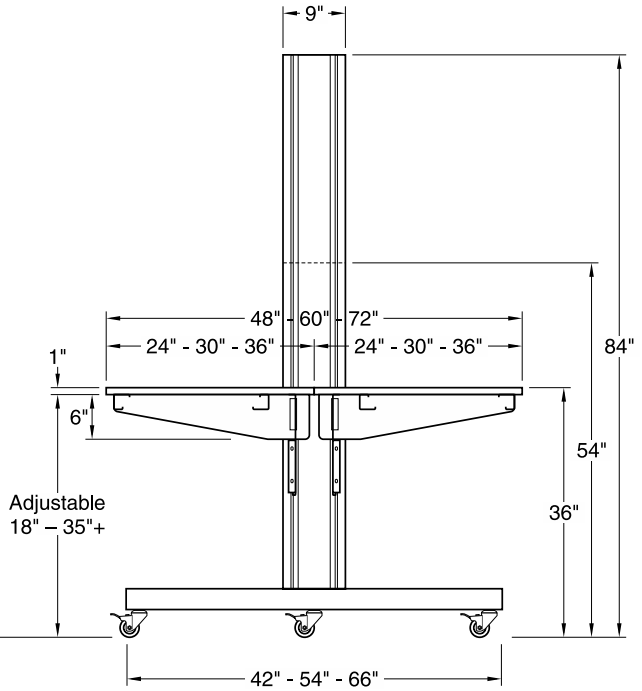

FV20MXXXXXX-01 & 02 End Elevation

Illustrations and specifications are based on most current design and production information available. Kewaunee reserves the right to make changes at any time without notice.

Technical Information

Dimensions – FV40 & FV41 Double-sided 12" Column Workstation on Glides

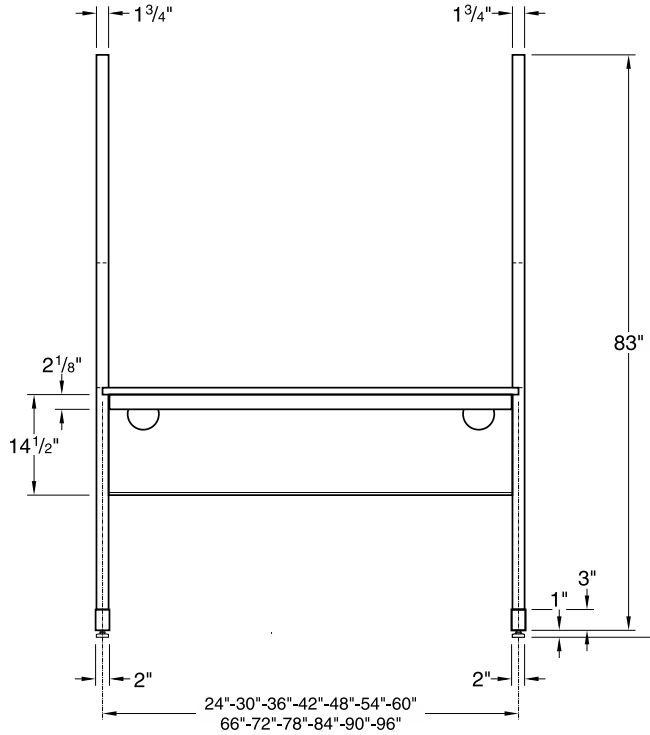

FV40MXXXXXX-00 Front Elevation

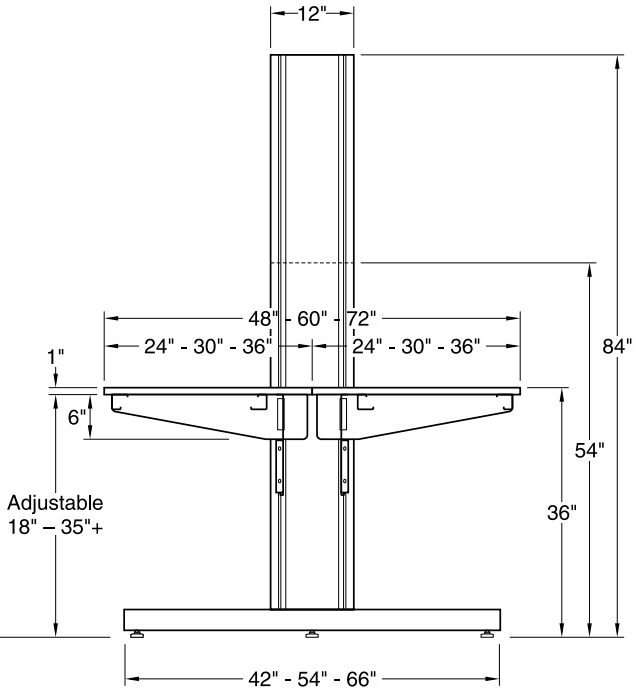

FV40MXXXXXX-00 End Elevation

Dimensions – FV40 & FV41 Double-sided 12" Column Workstation Casters

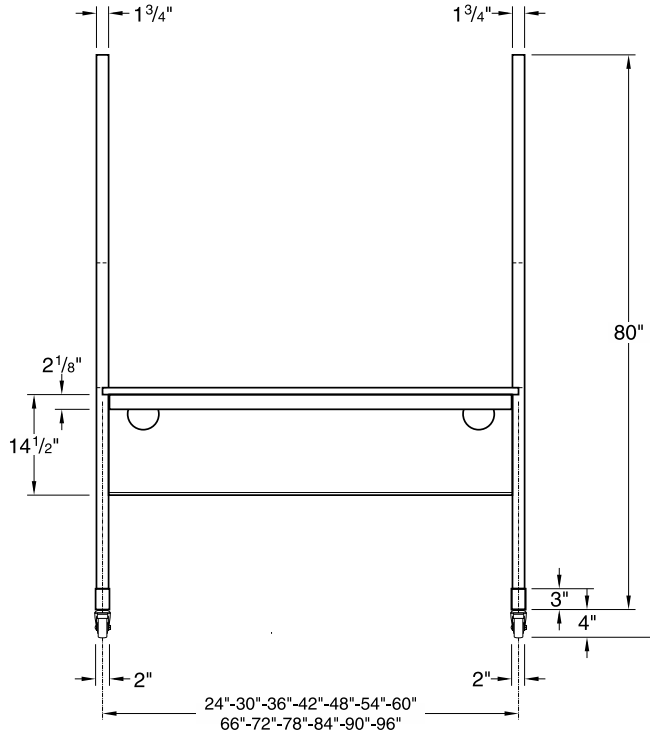

FV40MXXXXXX-01 & 02 Front Elevation

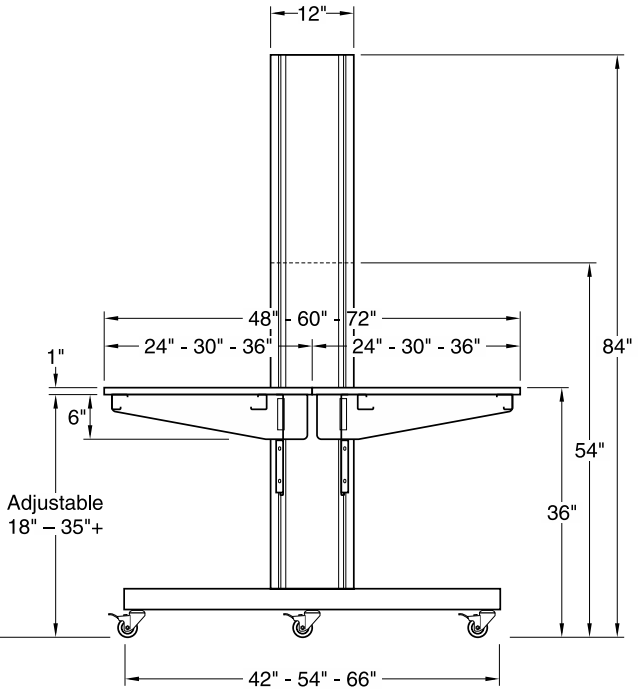

FV40MXXXXXX-01 & 02 End Elevation

Illustrations and specifications are based on most current design and production information available. Kewaunee reserves the right to make changes at any time without notice.

Technical Information

Dimensions – Single-sided Undermount Shelf Assemblies

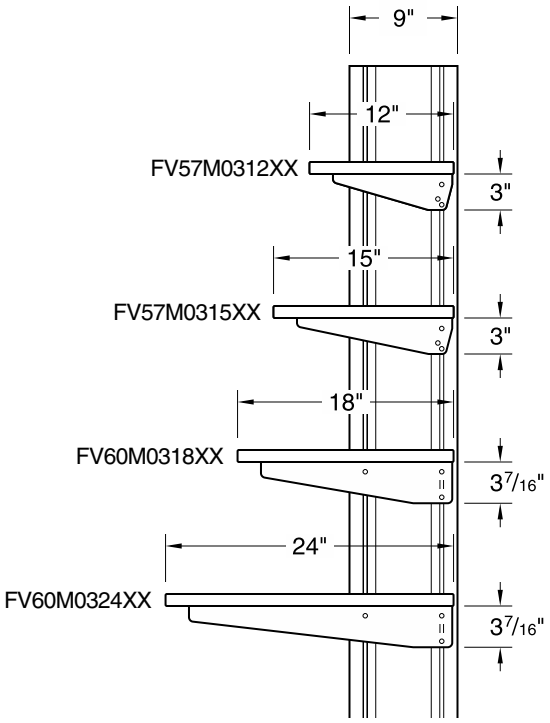

9" Column Section View

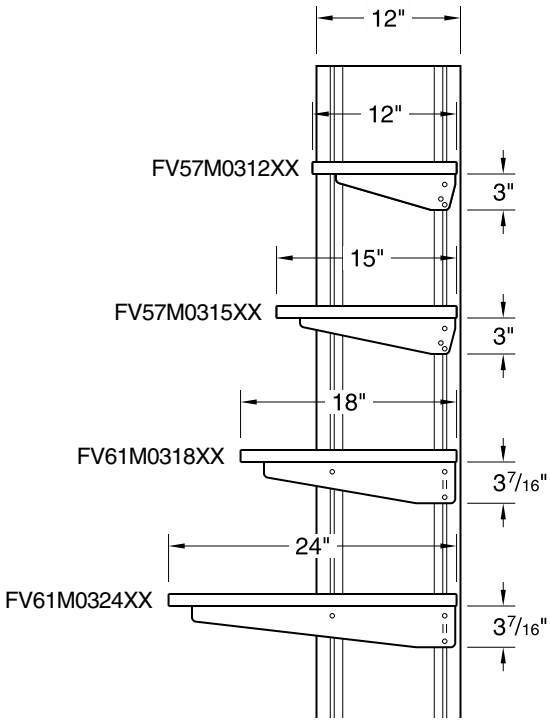

12" Column Section View

Dimensions – Single-sided Bookend Shelf Assemblies

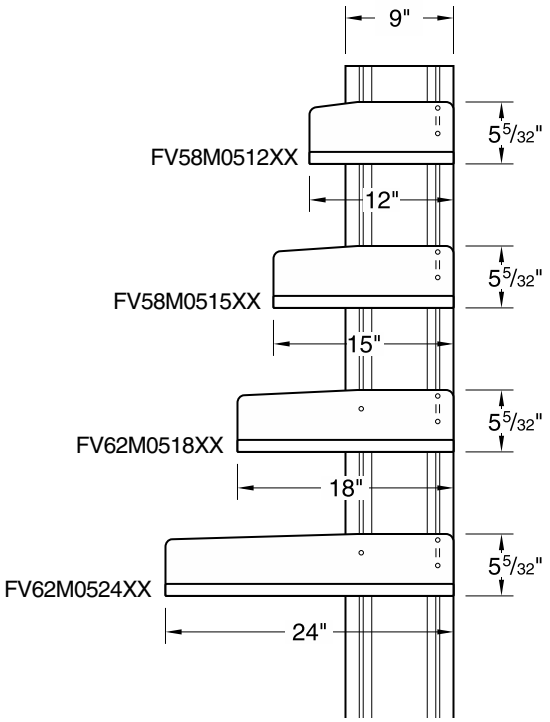

9" Column Section View

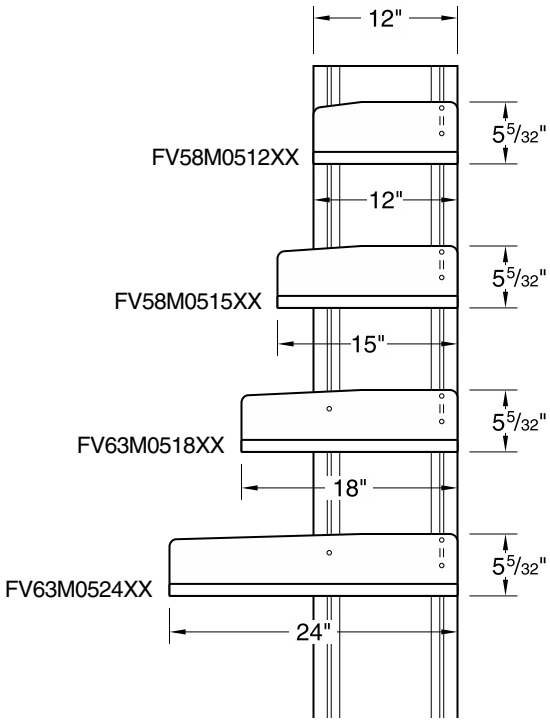

12" Column Section View

Illustrations and specifications are based on most current design and production information available. Kewaunee reserves the right to make changes at any time without notice.

Technical Information

Dimensions – Double-sided Undermount Shelf Assemblies

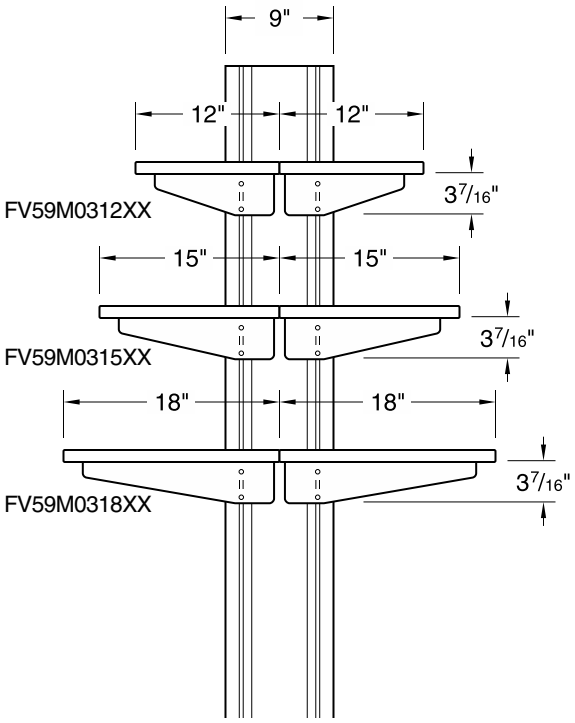

9" Column Section View

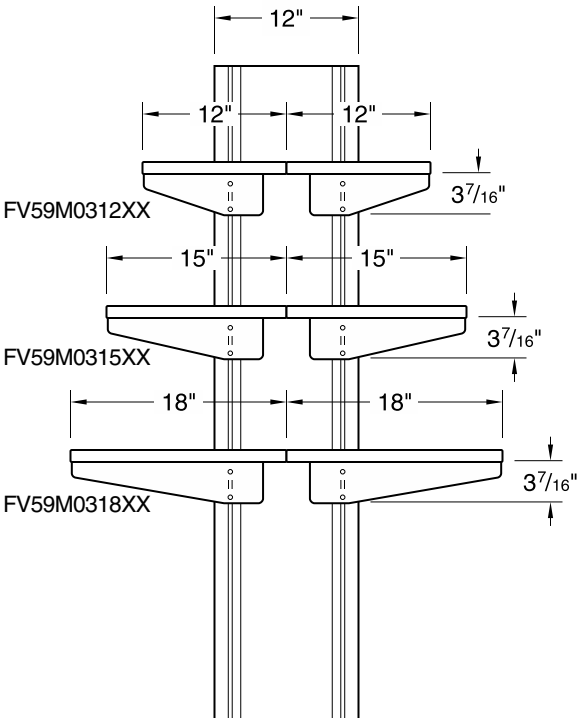

12" Column Section View

Dimensions – Double-sided Bookend Shelf Assemblies

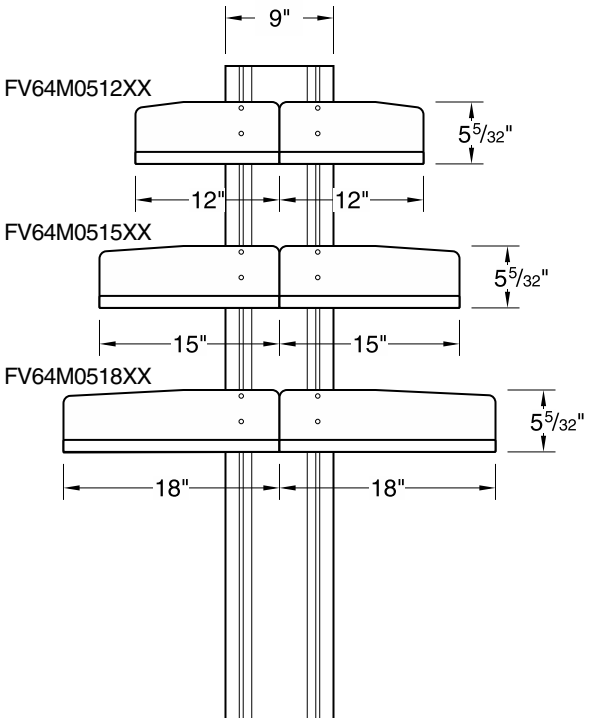

9" Column Section View

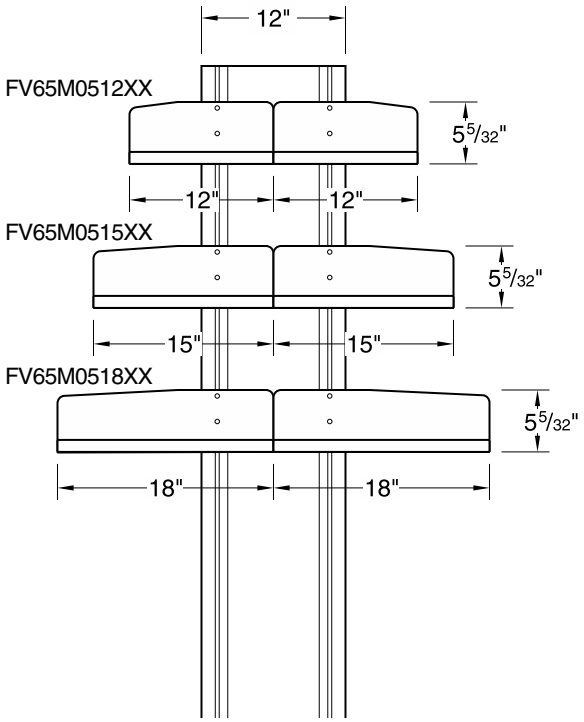

12" Column Section View

Technical Information

Dimensions – Center Undermount Shelf Assemblies

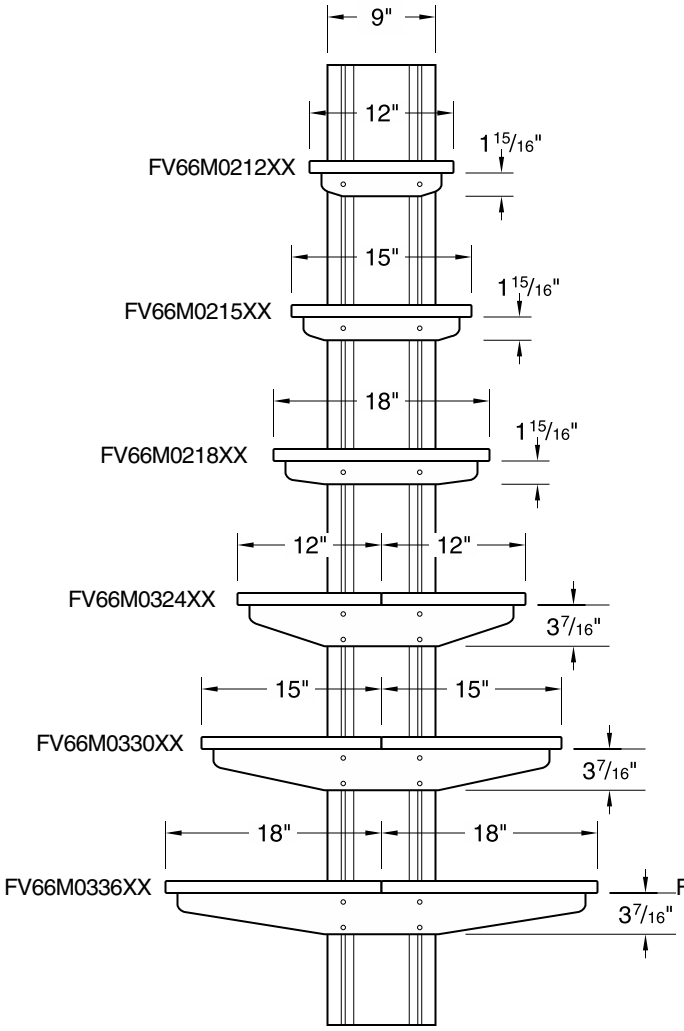

9" Column Section View

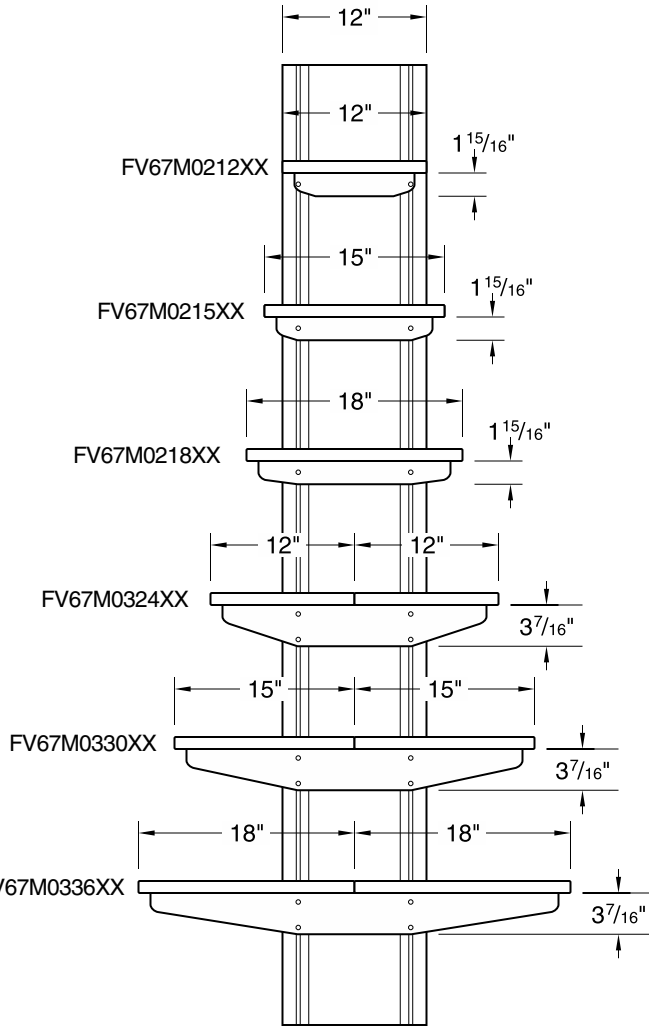

12" Column Section View

Illustrations and specifications are based on most current design and production information available. Kewaunee reserves the right to make changes at any time without notice.

KEWAUNEE Scientific Corporation

Technical Information

Dimensions – Suspended Cabinets

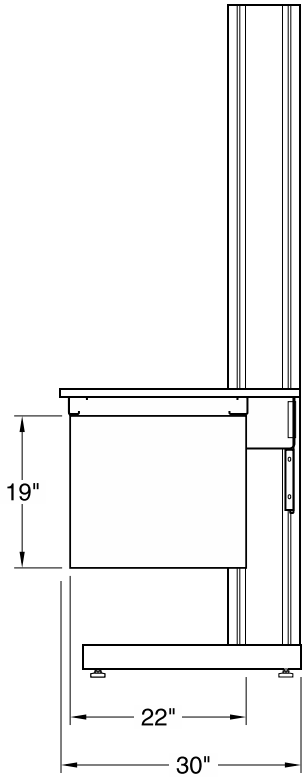

30" Deep Workstation

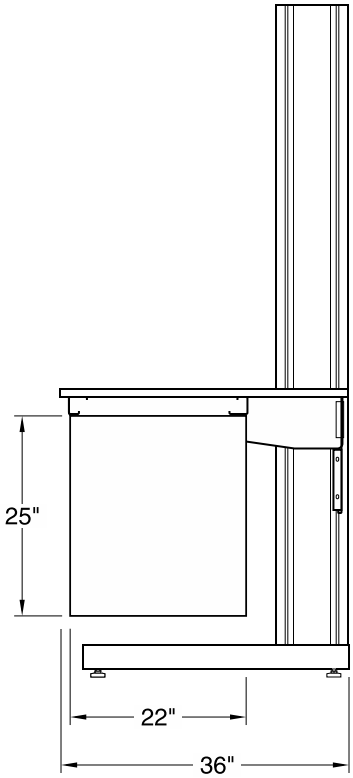

36" Deep Workstation

Dimensions – Mobile Cabinets

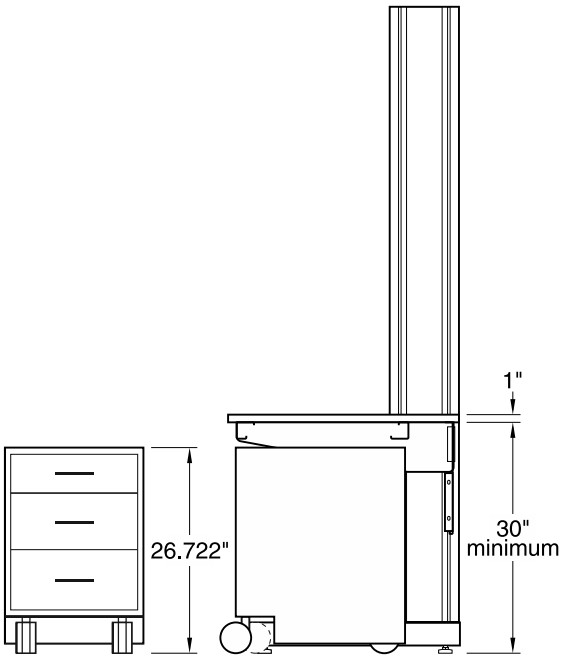

Sitting Height Mobile Cabinet

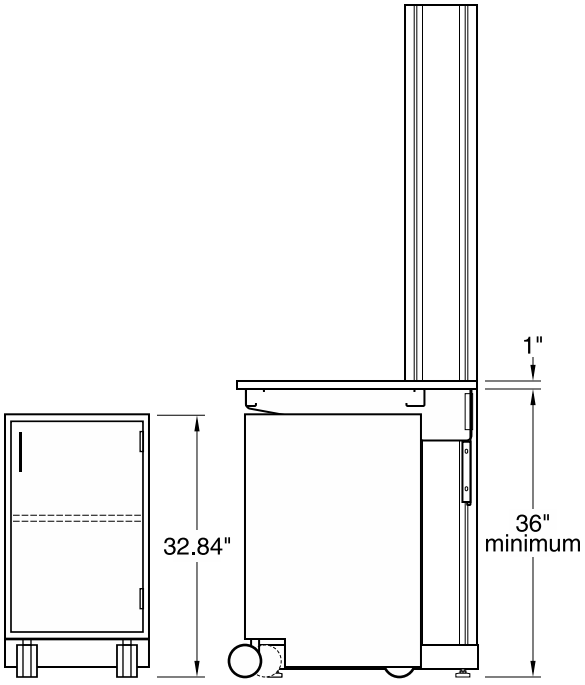

Standing Height Mobile Cabinet

Illustrations and specifications are based on most current design and production information available. Kewaunee reserves the right to make changes at any time without notice.

Alphabetical Index

Part Description	Page
Accessories	
Bin Bar	39
Horizontal Chase	40
Power Bar	37
Tack Panels	38
Mobile Floor Shelving	34
Cabinets	
Cabinet Door & Drawer Styles	47
Cabinet Part Number Explaination	48
Mobile Cabinets	50
Suspended Base Cabinets - 19" High	56
Suspended Base Cabinets - 25" High	58
Suspended Drawer Units	61
Ceiling Service Panels	74
Electric/Data Fixtures	76
Hose Wrap	77
Keyed Quick-connect Fittings	77
Polyurethane Hose	77
Power Cords	76
RJ45 8P8C Data/Com Outlets	76
Twist-lock Receptacles	76
Columns	20
Column Foot Options	5
Corner Work Tops	16
Dimensions	
Base Cabinet	49
Mobile Cabinets	85
Shelving	82
Suspended Cabinets	85
Workstations	78
Fittings & Fixtures	
Ball Valves	43
Cord Access Ports	45
Duplex Receptacles	44
GFCI Receptacles	44
Needle Point Cocks	43
Power Cords	45
RJ45 8P8C Data/Com Outlets	44
Hoses	
Extentions Service Hoses	77
Polyurethane Hose	77
PVC Hoses	42
Internal Service Hoses	42
Keyed Quick-connect Fittings	42 & 77
Stainless Steel Hoses	42
Lighting	
Fluorescent Overhead Lighting	36
Fluorescent Tasking Lighting	35
LED Overhead Lighting	36
LED Task Lighting	35

Part Description	Page
Load Ratings	2
Mobile Cabinet	
Grab Bar	55
Tops	55
Add-A-Drawer	54
Steel	52
Wood	50
Part Number Explanation	2
Shelving	
Single-sided for 9" Column	22
Single-sided for 12" Column	27
Double-sided for 9" Column	24
Double-sided for 12" Column	29
Center for 9" Column	26
Center for 12" Column	31
Shelf Brackets	32
Upper Storage Cabinets	
Sliding Glazed Doors	63 & 67
Sliding Panel Doors	63 & 68
Sliding Plate Glass Doors	62 & 66
Swinging Glazed Doors	64 & 69
Swinging Panel Doors	64 & 70
Upper Storage Cabinets — Pass-thru	
Sliding Glazed Doors	65 & 72
Sliding Panel Doors	65 & 72
Sliding Plate Glass Doors	65 & 71
Swinging Glazed Doors	65 & 73
Swinging Panel Doors	65 & 73
Workstations Modules	
Single-sided – 9" Column	6
Double-sided – 9" Column	8
Single-sided – 12" Column	10
Double-sided – 12" Column	12
Corner Modules	16
Work Tops	
Module Work Tops	14
Corner Work Tops	16
Worksurface Frames	18
Module Worksurface Frames	18
Corner Worksurface Frames	18

Illustrations and specifications are based on most current design and production information available. Kewaunee reserves the right to make changes at any time without notice.

Numerical Index

Part Number		Page
0620-1K	– 0624-1K	76
0720-0K-6	– 0720-0V-6a	76
C03C192215-	– C03C192224L	56
C03C252215-	– C03C252224L	58
C03W202215-	– C03W202224L	56
C03W262215-	– C03W262224L	58
D00C062216-	– D00C132224-	61
D00C192215-	– D00C192224-	56
D00C252215-	– D00C252224-	58
D00W202215-	– D00W202224-	56
D00W262215-	– D00W262224-	58
D08C252215-	– D08C252224-	58
D08W262215-	– D08W262224-	58
D10C252215-	– D10C252224-	58
D10W262215-	– D10W262224-	58
D30C192215-	– D30C192224-	56
D30C252215-	– D30C252224-	59
D30W202215-	– D30W202224-	56
D30W262215-	– D30W262224-	59
D50C192215-	– D50C192224-	56
D50W202215-	– D50W202224-	56
D81C192215-	– D81C192224-	57
D81C252215-	– D81C252224-	59
D81W202215-	– D81W202224-	57
D81W262215-	– D81W262224-	59
D85C192215-	– D85C192224-	57
D85C252215-	– D85C252224-	59
D85W202215-	– D85W202224-	57
D85W262215-	– D85W262224-	59
D86C192215-	– D86C192224-	57
D86W202215-	– D86W202224-	57
E40C252215-	– E40C252224L	60
E40W262215-	– E40W262224L	60
F-5314-00	– F-5316-00	35
F73M0015-00	– F73S0024-00	55
F-8250-36-BK	– F8250-72-NA	77
F-8421-00	–	45
F94M2215-00	– F94M2214-00	55
F94P2215-00	– F94T2424-00	55
FV01M362402-	– FV04M847202-	20
FV10M362424-	– FV11M843696-	6
FV14M062426-	– FV15M063652-	16
FV20M364824-	– FV21M847296-	8
FV30M362424-	– FV31M843696-	10
FV34M062426-	– FV35M063652-	16
FV40M364824-	– FV41M847296-	12
FV50M030224-1_	– FV52M032296-2_	37
FV52M031624-00	– FV52M032296-00	36
FV53M031624-00	– FV53M032296-00	36
FV57M031224-	– FV57M031596-	22&27
FV57M0312PR-00	– FV57M0315PR-00	32
FV58M051224-	– FV58M051596-	23&28
FV58M0512PR-00	– FV58M0515PR-00	32
FV59M031224-	– FV59M031896-	24&29
FV59M0312PR-00	– FV59M0318PR-00	33
FV60M031824-	– FV60M032496-	22
FV60M0318PR-00	– FV60M0324PR-00	32
FV61M031824-	– FV61M032496-	27
FV61M0318PR-00	– FV61M0324PR-00	32
FV62M051824-	– FV62M052496-	23
FV62M0518PR-00	– FV62M0524PR-00	32
FV63M051824-	– FV63M052496-	28
FV63M0518PR-00	– FV63M0524PR-00	32
FV64M051224-	– FV64M051896-	25
FV64M0512PR-00	– FV64M0518PR-00	33
FV65M051224-	– FV65M051896-	30
FV65M0512PR-00	– FV65M0518PR-00	33
FV66M021224-	– FV66M033696-	26
FV66M0212PR-00	– FV66M0336PR-00	33
FV67M021224-	– FV67M033696-	31
FV67M0212PR-00	– FV67M0336PR-00	33
FV70M020224-00	– FV70S020296-00	39
FV72M040824-00	– FV72M041196-00	40
FV73M120224-00	– FV73M240296-00	38
FV79M042124-00	– FV79M043396-00	34
FV80M062424-	– FV81M063696-	18
FV82M062424-	– FV83M063696-	19
FV90_012424-	– FV91_017296-	14
FV92_012424-	– FV93_017296-	15
FV94_012426-	– FV95_013652-	16
FV96_012426-	– FV97_013652-	17
FV-D620-1K-6	– FV-D620-1W-6a	44
FV-H581-1K	– FV-H581-6W	44
FV-S581-1K	– FV-S581-6W	44
FV-S656-1K	– FV-S656-6W	44
FV-S681-1K	– FV-S681-6W	44
FW10C301330-	– FW10C303248-	62
FW10C301354-	– FW10C303296-	66
FW10W301230-	– FW10W303248-	62
FW10W301254-	– FW10W303296-	66
FW11C301330-	– FW11C303248-	63
FW11C301354-	– FW11C303296-	67
FW11W301230-	– FW11W303248-	63
FW11W301254-	– FW11W303296-	67
FW12C301330-	– FW12C303248-	63
FW12C301354-	– FW12C303296-	68
FW12W301230-	– FW12W303248-	63
FW12W301254-	– FW12W303296-	68
FW13C301630-	– FW13C302248-	65
FW13C301654-	– FW13C302296-	71
FW13W301630-	– FW13W302248-	65
FW13W301654-	– FW13W302296-	71
FW14C301630-	– FW14C302248-	65
FW14C301654-	– FW14C302296-	72
FW14W301630-	– FW14W302248-	65
FW14W301654-	– FW14W302296-	72
FW15C301630-	– FW15C302248-	65
FW15C301654-	– FW15C302296-	72
FW15W301630-	– FW15W302248-	65
FW15W301654-	– FW15W302296-	72
FW20C301330-	– FW20C303248-	64
FW20C301354-	– FW20C303296-	69
FW20W301254-	– FW20W303296-	69
FW23C301630-	– FW23C302248-	65
FW23C301654-	– FW23C302296-	73
FW23W301630-	– FW23W302248-	65
FW23W301654-	– FW23W302296-	73
FW25C301354-	– FW25C303296-	70
FW25W301230-	– FW25W303248-	64
FW25W301254-	– FW25W303296-	70
FW28C301630-	– FW28C302248-	65
FW28C301654-	– FW28C302296-	73
FW28W301630-	– FW28W302248-	65
FW28W301654-	– FW28W302296-	73
M10C272215-	– M10C272224L	52
M10C332215-	– M10C332224L	53
M10W272215-	– M10W272224L	50
M10W332215-	– M10W332224L	51
M15W272215-	– M15W272224L	50
M15W332215-	– M15W332224L	51
M20C272215-	– M20C272224L	52
M20C332215-	– M20C332224L	53
M20W272215-	– M20W272224L	50
M20W332215-	– M20W332224L	51
M25C272215-	– M25C272224L	52
M25C332215-	– M25C332224L	53
M25W272215-	– M25W272224L	50
M25W332215-	– M25W332224L	51
M30C272215-	– M30C272224-	52
M30W272215-	– M30W272224-	50
M35C272215-	– M35C272224-	52
M35W272215-	– M35W272224-	50
M40C332215-	– M40C332224-	53
M40W272215-	– M40W272224-	50
M45C272215-	– M45C272224-	52
M45W272215-	– M45W272224-	51
M46C332215-	– M46C332224-	53
M50W272215-	– M50W272224-	51
M56C332215-	– M56C332224-	53
M60W272215-	– M60W272224-	50
M62C272215-	– M62C272224-	52
M62W272215-	– M62W272224-	50
M62W272215-	– M62W272224-	51
M63W272215-	– M63W272224-	51
M65W272215-	– M65W272224-	50
M66C272215-	– M66C272224-	52
M67W272215-	– M67W272224-	51
M68C332215-	– M68C332224-	53
M71C332215-	– M71C332224-	52
M75W272215-	– M75W272224-	51
M90W332215-	– M90W332224L	54
M95W332215-	– M95W332224-	54
SC10M022424-00	– SC10M022448-00	76
W-0602-0A	– W-0606-0V	43
W-1133-36-	– W-1233-96-	77
W-1533-72	–	77
W-5621-36	– W-5624-96	45&76
W-6132E36-	– W-6135E96-	42
W-8111-K1	– W-8111-K8	42
W-8111-K1	– W-9122-K8	77

Illustrations and specifications are based on most current design and production information available. Kewaunee reserves the right to make changes at any time without notice.

KEWAUNEE Scientific Corporation

Typical Installations

KEWAUNEE® Scientific Corporation

Typical Installations

Kewaunee Scientific Corporation is dedicated to manufacturing high quality products for the laboratory marketplace. We offer **Total Laboratory Solutions, Innovative Designs, and Technological Expertise** with a worldwide distribution network to provide laboratories that are truly World Class.

Laboratory Products from Kewaunee®:

ALPHA® – Adaptable Casework System

ALPHA Columns – Expandable Workstations

ALPHA Overhead Carrier Systems

BasikBench® – Welded C-Leg Bench

DetectAir – Filtered/Ductless Fume Hoods

EarthLine® – Environmentally Friendly Casework

Enterprise® – Moveable Workstations

Evolution® – Column Based Workstations

Interceptor® – Biological Safety Cabinet

Interceptor® – Laminar Flow Cabinet

Kemresin® – Epoxy Resin Counters & Sinks

Kewaunee Matrix® – Educational Stations

Research Collection® – Steel Casework

Signature® Series – Wood Casework

Spektrum – Laminate Architectural Millwork

Sturdilite® – Flexible Pedestal System

Supreme Air® – Fume Hoods

For our complete product offering, specifications, catalogs, brochures, case studies, and dealer list, go to www.kewaunee.com, or contact your local sales representative directly.

Kewaunee, Alpha, Basic Bench, EarthLine, Enterprise, Evolution, Interceptor, Kemresin, Kewaunee Matrix, Research Collection, Signature, Sturdilite, and Supreme Air are registered trademarks of Kewaunee Scientific Corporation

KEWAUNEE® Scientific Corporation

P.O. Box 1842 • Statesville, NC 28687-1842
Phone: (704) 873-7202 • Fax: (704) 873-5160
E-mail: kscmarketing@kewaunee.com
Web Site: www.kewaunee.com

Kewaunee Labway India Pvt. Ltd.
No. CA-9A, 2nd Floor, Jigani Link Road
Jigani, Bangalore 562 106, India
Phone: 9180-27826725 • Fax: 9180-27826724
Web Site: www.kewaunee.in

Kewaunee Labway Asia Pte. Ltd.
194 Pandan Loop, #06-22
Pantech Business Hub, Singapore 128 383
Phone: 65-6773-0288 • Fax: 65-6773-2322

Kewaunee Scientific (Suzhou) Co Ltd
333 Xingpu Road, Modern Industrial Square
Building 4, Unit #2-A • Suzhou Industrial Park • China
Phone: (0512) 6262 5090 • Fax: (0512) 6262 5089
Web Site: china.kewaunee.com

© Copyright 2016

Printed in U.S.A. 06/16